DocuSign Envelope ID: B08EC441-702C-432F-A99C-BDA94365107 3

NOTES:

1. PRECAST CONCRETE MANHOLES SHALL MEET OR EXCEED THE REQUIREMENTS OF ASTM C 478. ALL SURFACES SHALL BE SMOOTH AND EVEN TEXTURED WITH A MINIMUM OF HONEYCOMB, FIN, AND OTHER IMPERFECTIONS.
2. JOINTS BETWEEN MANHOLE SECTIONS SHALL BE SEALED WATERTIGHT USING EITHER O-RING GASKETS CONFORMING WITH ASTM C 443 OR BUTYL RESIN CONFORMING WITH AASHTO M-198.
3. EXTERIOR JOINTS SHALL BE SEALED WITH A 4" WIDE BUTYL RUBBER WRAP.
4. ADD INTERIOR HIGH SOLIDS EPOXY PROTECTION COATING FOR EXISTING MANHOLES RECEIVING DISCHARGE FROM FORCE MAINS PER BRUNSWICK COUNTY TECHNICAL SPECIFICATIONS (MIN. 20 MILS).
5. HOLES FOR CONNECTION OF PIPE TO MANHOLE SHALL BE PRECAST OR CORED. DIAMETER OF HOLE SHALL NOT EXCEED OUTSIDE DIAMETER OR PIPE BY MORE THAN 3 INCHES.
6. CONNECTIONS OF PIPE TO MANHOLE SHALL BE MADE WATERTIGHT USING RESILIENT CONNECTORS CONFORMING TO ASTM C 923 OR NEOPRENE BOOTS EMBEDDED IN PRECAST BASE WITH STAINLESS STEEL COMPRESSION BANDS.
7. MANHOLE INVERTS SHALL BE INSTALLED USING BRICK AND MORTAR, OR MANHOLES MAY BE PRECAST, MONOLITHIC SECTIONS WITH FORMED INVERTS.
8. LIFT HOLES SHALL BE PLUGGED AND FILLED FLUSH WITH MORTAR.
9. ALL BRICK AND MORTAR SHALL RECEIVE A 1/2" MORTAR PARGE COAT ON INSIDE AND OUTSIDE.
10. ALL SPACE BETWEEN PIPE AND OPENING INSIDE OF MANHOLE TO BE GROUTED WITH TYPE S MORTAR
11. SEWER MAIN PENETRATIONS AND/OR SERVICE LATERAL PENETRATIONS ENTERING AT 30" OR LESS ABOVE THE MANHOLE BENCH SHALL HAVE A SLIDE CONSTRUCTED OF BRICK AND MORTAR.(SEE DETAIL)
12. ALL PENETRATIONS ENTERING MANHOLE AT GREATER THAN 30" SHALL BE AN INSIDE DROP MANHOLE (SEE DETAIL).
13. INSIDE DROP MANHOLES, AND PUMP STATION RECEIVING MANHOLES SHALL BE MINIMUM 5' DIAMETER MANHOLES.
14. SANITARY SEWER MANHOLES SHALL BE COATED WITH COAL TAR EPOXY 20 MILS THROUGHOUT THE INSIDE OF THE MANHOLE.
15. ALL MANHOLES SHALL HAVE A SEWER GUARD INSERT INSTALLED – PLASTIC IS ALLOWED IN NON-TRAFFIC AREAS – STAINLESS STEEL INSERT PANS ARE REQUIRED IN TRAFFIC AREAS
16. MANHOLES SHALL BE TRAFFIC BEARING WITH A MINIMUM HS-20 LOAD ALLOWANCE.
17. FOR NEW SEWER FORCE MAINS CONNECTING TO AN EXISTING COUNTY GRAVITY SYSTEM THAT REQUIRES THE CUT IN OF A NEW MANHOLE:
    THE NEW SEWER MANHOLE SHALL BE PRECAST POLYMER CONFORMING TO ASTM C478 AS MANUFACTURED BY ARMOROCK, MEYER POLYCRETE OR APPROVED EQUAL. RISER SECTION JOINTS SHALL BE BELL AND SPIGOT /SHIP-LAP DESIGN SEAMED WITH BUTYL MASTIC AND/OR RUBBER GASKETS (ASTM C990) SO THAT ON ASSEMBLY THE MANHOLE BASE, RISER(S) AND TOP SECTIONS MAKE A CONTINUOUS AND UNIFORM MANHOLE STRUCTURE.
    A CARBON FILTER MUST BE PROVIDED ON ANY MANHOLE THAT HAS A FORCE MAIN SEWER SYSTEM CONNECTION.

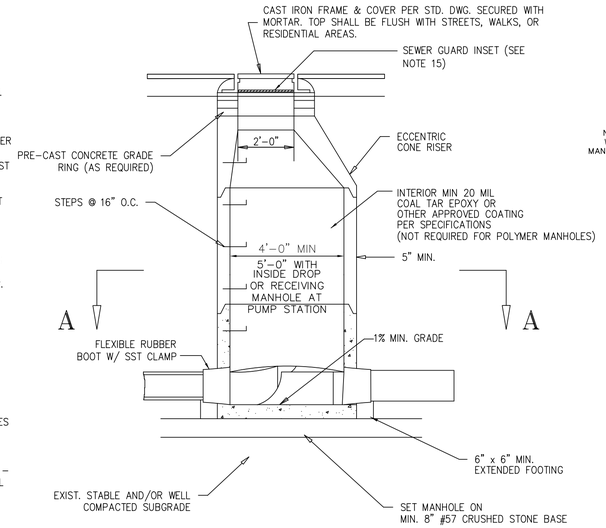

PRECAST CONCRETE MANHOLE
DETAIL S-1

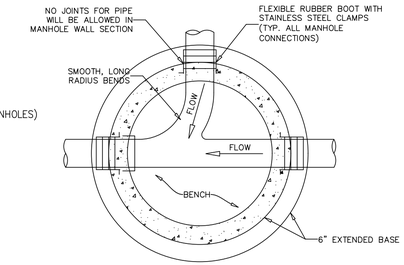

SECTION A-A

Prepared In the Office of:

AECOM

AECOM TECHNICAL SERVICES OF NORTH CAROLINA, INC.
701 CORPORATE CENTER DRIVE, SUITE 475, RALEIGH, NC 27607
919-854-6200 919-854-6259 (fax)
F-0342

DOCUMENT NOT CONSIDERED FINAL UNLESS ALL SIGNATURES COMPLETED

PROJECT REFERENCE NO.	SHEET NO.
R-5021	UC-3M

DESIGNED BY:
DRAWN BY:
CHECKED BY:
APPROVED BY:
REVISED:

NORTH CAROLINA DEPARTMENT OF TRANSPORTATION

UTILITIES ENGINEERING SEC.
PHONE:(919)707-6690
FAX:(919)250-4151

9/9/2021
NORTH CAROLINA PROFESSIONAL SEAL 10666 ENGINEER D. STEPHEN SCRUGGS
D. Stephen Scruggs
DocuSigned by:
B57A9DE3D6477...

UTILITY CONSTRUCTION PLANS ONLY

UTILITY CONSTRUCTION

MANUFACTURER	MODEL NUMBER
US FOUNDRY	725 RING / DP-SSG COVER
US FOUNDRY	710 RING / DP-SSG COVER
CAPITAL FOUNDRY	MH-3000
EAST JORDAN IRON WORKS	202711 RING / 202746 COVER
GENERAL FOUNDRIES	GFI-7126 / GFI-41261

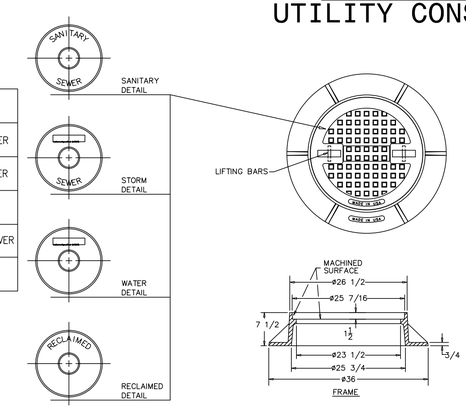

STANDARD MANHOLE RING AND COVER
DETAIL S-2

SECTION ALONG CENTERLINE OF MAIN
PRECAST DOGHOUSE MANHOLE

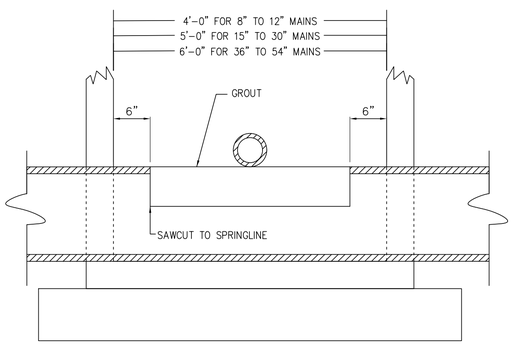

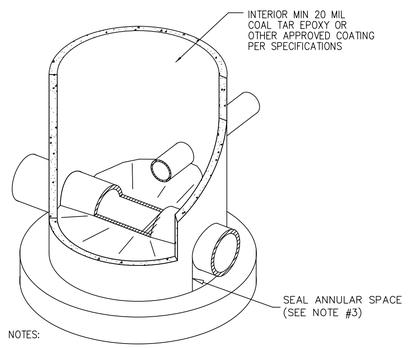

NOTES:

1. FLOW SHALL BE MAINTAINED DURING CONSTRUCTION.
2. THIS DETAIL TO BE USED WHEN A NEW 6" OR LARGER LATERAL OR MAIN NECESSITATES CONSTRUCTION OF A NEW MANHOLE.
3. ANNULAR SPACE BETWEEN PIPE AND MANHOLE MUST BE SEALED WITH BRICK AND MORTAR TO PREVENT INFILTRATION.
4. FOR POLYMER MANHOLE – CONCRETE GROUT AND COATED WITH EPOXY KIT AS REQUIRED PER MANUFACTURER.

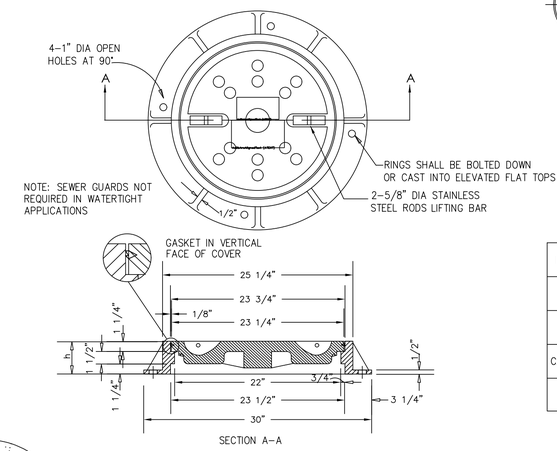

MANUFACTURER	MODEL NUMBER
US FOUNDRY	725 RING / DP-LOC SSG
US FOUNDRY	710 RING / DP-LOC SSG
CAPITAL FOUNDRY	MH-3000-WT
EAST JORDAN IRON WORKS	202701 RING / 202722 COVER

WATERTIGHT MANHOLE RING AND COVER
DETAIL S-3

Revisions

1.1 - DATED 4/30/2013
1.2 - DATED 1/23/2019
1.3 - DATED 5/5/2020
1.4 - DATED 10/7/2020
Mod Detail S-3

GENERAL SEWER DETAILS FOR BRUNSWICK COUNTY NORTH CAROLINA

COUNTY OF BRUNSWICK

NOTE: FILL ANNULAR SPACE BETWEEN OUTSIDE OF PIPE AND MH WITH CONCRETE OR MASONRY TO INSURE WATERTIGHTNESS.

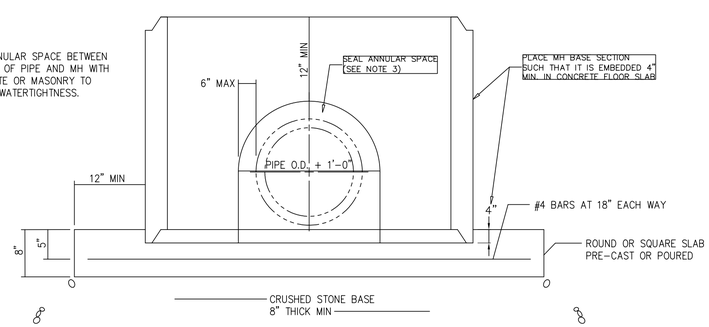

PRECAST CONCRETE DOGHOUSE MANHOLE
DETAIL S-4

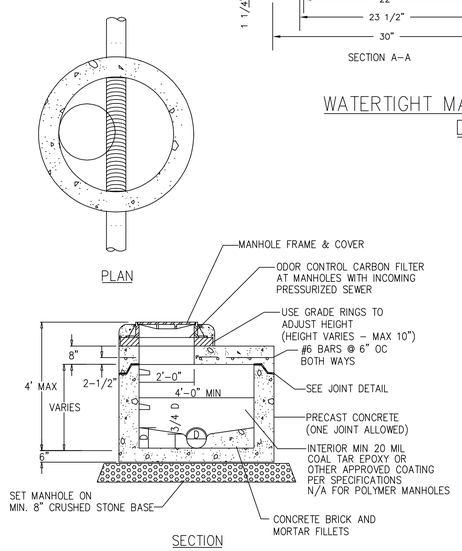

SHALLOW PRECAST CONCRETE
MANHOLE WITH FLAT TOP
DETAIL S-5

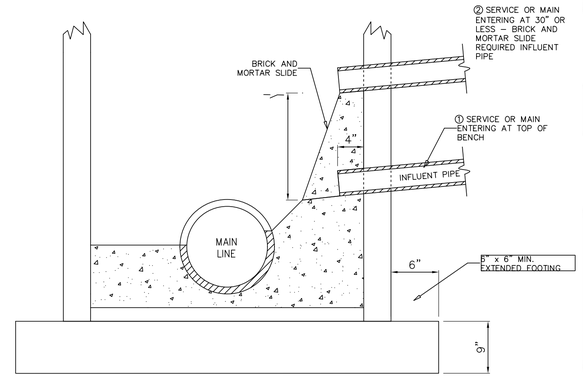

CROSS SECTION AT EXISTING MANHOLE
MAINS OR SERVICES ENTERING MANHOLE
DETAIL S-6

Date: 06-14-12
Scale: NTS
Drawn By: JDM
Checked By: WLP

DATE: 8/13/2021
TIME: 12:39:44 PM
DGN: P:\60428203\900_Work\95_Utility Construction\R-5021_UC_UC3M.dgn