DocuSign Envelope ID: 4D35EB39-7F72-4FAA-8199-A751BC72599F

PROJECT REFERENCE NO.	SHEET NO.
R-5021	Sig. 12.1

EDI MODEL 2018ECL-NC CONFLICT MONITOR PROGRAMMING DETAIL

(remove jumpers and set switches as shown)

REMOVE DIODE JUMPERS 1-5, 1-6, 1-9, 1-10, 1-11, 1-12, 2-5, 2-6, 2-9, 2-11, 2-12, 4-8, 4-10, 4-12, 5-9, 5-10, 5-11, 5-12, 6-9, 6-10, 6-11, 8-10, 8-12, 9-10, 9-11, 9-12, 10-11, 10-12, and 11-12.

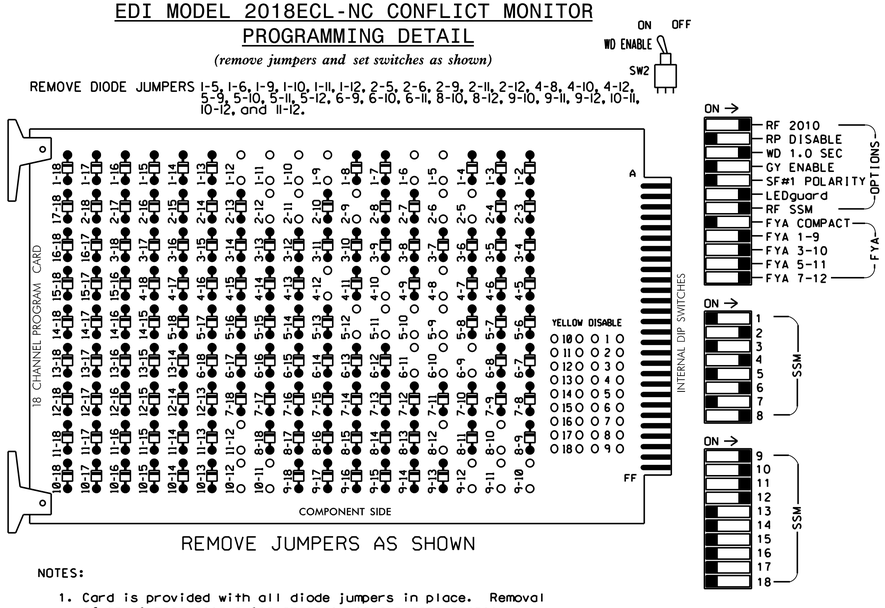

REMOVE JUMPERS AS SHOWN

NOTES:

1. Card is provided with all diode jumpers in place. Removal of any jumper allows its channels to run concurrently.
2. Ensure jumpers SEL2-SEL5 and SEL9 are present on the monitor board.
3. Ensure that Red Enable is active at all times during normal operation.
4. Connect serial cable from conflict monitor to comm. port 1 of 2070 controller. Ensure conflict monitor communicates with 2070.

NOTES

1. To prevent "flash-conflict" problems, insert red flash program blocks for all unused vehicle load switches in the output file. The installer shall verify that signal heads flash in accordance with the Signal Plans.
2. Program phases 4 and 8 for Dual Entry.
3. Enable Simultaneous Gap-Out for all Phases.
4. Program phases 2 and 6 for Variable Initial and Gap Reduction.
5. Program phases 2 and 6 for Startup In Green.
6. Program phases 2 and 6 for Yellow Flash, and overlaps 1 and 2 as Wag Overlaps.
7. If this signal will be managed by an ATMS software, enable controller and detector logging for all detectors used at this location.

EQUIPMENT INFORMATION

CONTROLLER.....2070E
CABINET.....332 W/AUX
SOFTWARE.....ECONOLITE OASIS
CABINET MOUNT.....BASE
OUTPUT FILE POSITIONS...18 WITH AUX. OUTPUT FILE
LOAD SWITCHES USED.....S1,S2,S5,S7,S8,S11,AUX S1,AUX S2 AUX S4,AUX S5

PHASES USED.....1,2,4,5,6,8
OVERLAP "A".....1+2
OVERLAP "B".....1+8
OVERLAP "C".....5+6
OVERLAP "D".....4+5

SIGNAL HEAD HOOK-UP CHART

LOAD SWITCH NO.	S1	S2	S3	S4	S5	S6	S7	S8	S9	S10	S11	S12	AUX S1	AUX S2	AUX S3	AUX S4	AUX S5	AUX S6
CMU CHANNEL NO.	1	2	13	3	4	14	5	6	15	7	8	16	9	10	17	11	12	18
PHASE	1	2	2 PED	3	4	4 PED	5	6	6 PED	7	8	8 PED	OLA	OLB	SPARE	OLC	OLD	SPARE
SIGNAL HEAD NO.	11★	21,22	NU	NU	41,42	NU	51★	61,62	NU	NU	81,82	NU	11★	83★	NU	51★	43★	NU
RED		128			101			134			107			A124			A101	
YELLOW	✱	129			102		✱	135			108							
GREEN		130			103			136			109							
RED ARROW													A121			A114		
YELLOW ARROW													A122	A125		A115	A102	
FLASHING YELLOW ARROW													A123	A126		A116	A103	
GREEN ARROW	127						133											

NU = Not Used

✱ Denotes install load resistor. See load resistor installation detail this sheet.

★ See pictorial of head wiring in detail this sheet.

FYA SIGNAL WIRING DETAIL

(wire signal heads as shown)

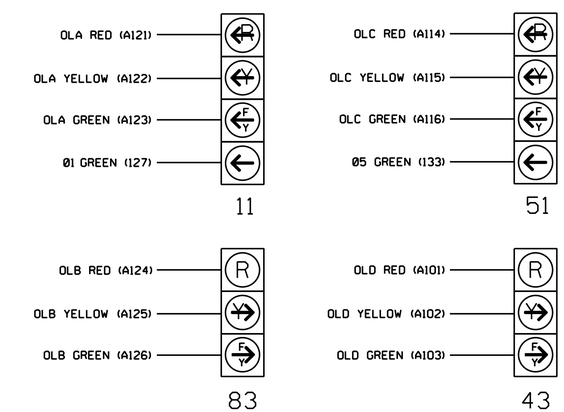

NOTE

The sequence display for signal heads 11 and 51 requires special logic programming. See sheet 2 for programming instructions.

INPUT FILE POSITION LAYOUT

(front view)

		1	2	3	4	5	6	7	8	9	10	11	12	13	14
FILE "I"	U	Ø 1 ZONE 1A	SLOT EMPTY	SLOT EMPTY	WIRED INPUT ⊗	SLOT EMPTY	SLOT EMPTY	SLOT EMPTY	SLOT EMPTY	SLOT EMPTY	SLOT EMPTY	SLOT EMPTY	SLOT EMPTY	SLOT EMPTY	FS DC ISOLATOR
	L	NOT USED													ST DC ISOLATOR
FILE "J"	U	Ø 5 ZONE 5A	SLOT EMPTY	SLOT EMPTY	WIRED INPUT ⊗	SLOT EMPTY	SLOT EMPTY	SLOT EMPTY	SLOT EMPTY	SLOT EMPTY	SLOT EMPTY	SLOT EMPTY	SLOT EMPTY	SLOT EMPTY	SLOT EMPTY
	L	NOT USED													

EX.: 1A, 2A, ETC. = LOOP NO.'S

FS = FLASH SENSE
ST = STOP TIME

⊗ Wired Input - Do not populate slot with detector card

INPUT FILE CONNECTION & PROGRAMMING CHART

LOOP NO.	LOOP TERMINAL	INPUT FILE POS.	PIN NO.	INPUT ASSIGNMENT NO.	DETECTOR NO.	NEMA PHASE	CALL	EXTEND	FULL TIME DELAY	STRETCH TIME	DELAY TIME
ZONE 1A[1]	★★	I1U	56	18	1	1	Y	Y			15
	-	J4U	48	10★	26	6	Y	Y			
	-	I1U	56	18★	51	1	Y	Y			
ZONE 5A[2]	★★	J1U	55	17	5	5	Y	Y			15
	-	I4U	47	9★	22	2	Y	Y			
	-	J1U	55	17★	55	5	Y	Y			

[1] Add jumper from I1-W to J4-W, on rear of input file.
[2] Add jumper from J1-W to I4-W, on rear of input file.
★ See Input Page Assignment programming details on sheets 3 and 4.
★★ Multizone Microwave Detector Zone. See Special Detector Note.

INPUT FILE POSITION LEGEND: J2L
FILE J
SLOT 2
LOWER

SPECIAL DETECTOR NOTE

Install a microwave detection system for vehicle detection. Perform installation according to manufacturer's directions and NCDOT engineer-approved mounting locations to accomplish the detection schemes shown on the Signal Design Plans.

For loops 1A and 5A detector card placement and slots reserved for wired inputs are typical for a NCDOT installation. Inputs associated with these slots are compatible with the time of day instructions located on sheets 3, 4, and 5 of this electrical detail.

LOAD RESISTOR INSTALLATION DETAIL

(install resistors as shown)

ACCEPTABLE VALUES	
VALUE (ohms)	WATTAGE
1.5K - 1.9K	25W (min)
2.0K - 3.0K	10W (min)

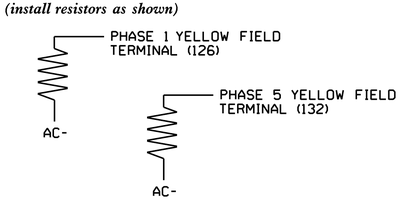

THIS ELECTRICAL DETAIL IS FOR
THE SIGNAL DESIGN: 03-0977T3
DESIGNED: June 2017
SEALED: 9/10/2021
REVISED: N/A

Electrical Detail - Sheet 1 of 5
Signal Upgrade
Temporary Design 3

DOCUMENT NOT CONSIDERED FINAL UNLESS ALL SIGNATURES COMPLETED

ELECTRICAL AND PROGRAMMING DETAILS FOR:

NC 211 (Southport-Supply Road)
at
St. James Drive

Division 03 Brunswick Co. Southport

PLAN DATE: June 2017 REVIEWED BY: A.D. Klinksiek
PREPARED BY: A.H. Thornburg REVIEWED BY: N.R. Simmons

REVISIONS | INIT. | DATE

Prepared for: Transportation Mobility and Safety Division, Traffic Engineering & Signals Management Section, Department of Transportation, State of North Carolina
750 N.Greenfield Pkwy,Garner,NC 27529

SEAL: NORTH CAROLINA PROFESSIONAL SEAL 031464 ENGINEER NATASHA R. SIMMONS

DocuSigned by: Natasha Simmons FRDA8RDF3AD445A... 9/10/2021
SIGNATURE DATE
SIG. INVENTORY NO. 03-0977T3

HNTB
HNTB NORTH CAROLINA, P.C.
343 E. Six Forks Road, Suite 200
Raleigh, North Carolina 27609
NC License No: C-1554
(919) 546-8997