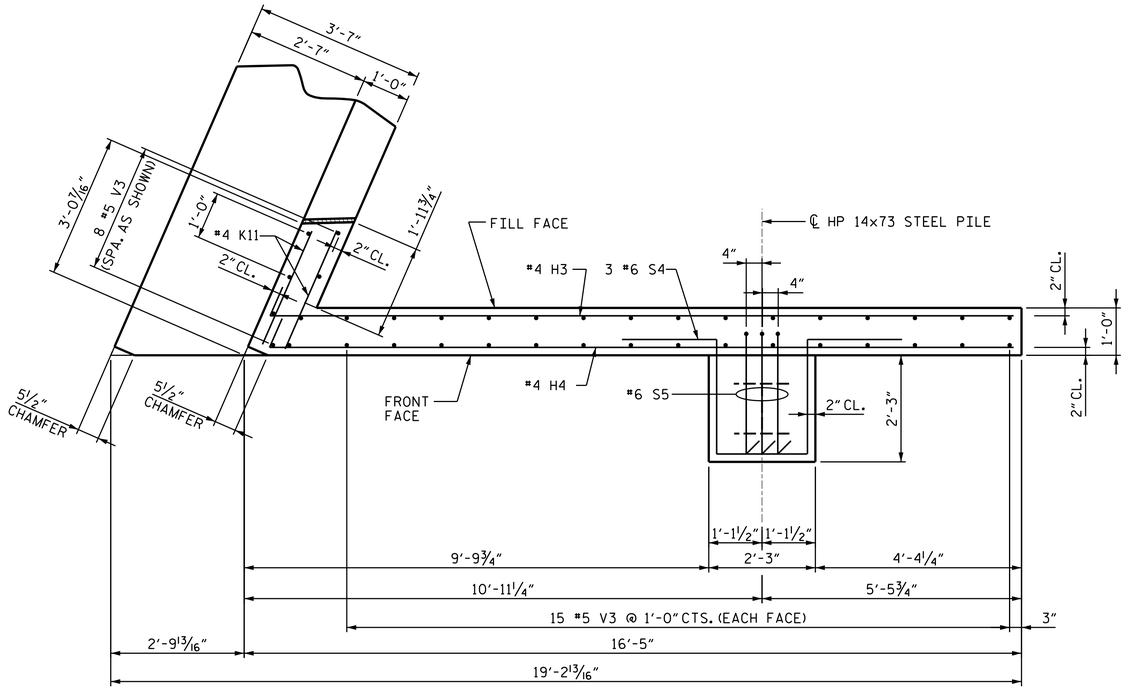

PLAN OF WING (W4)

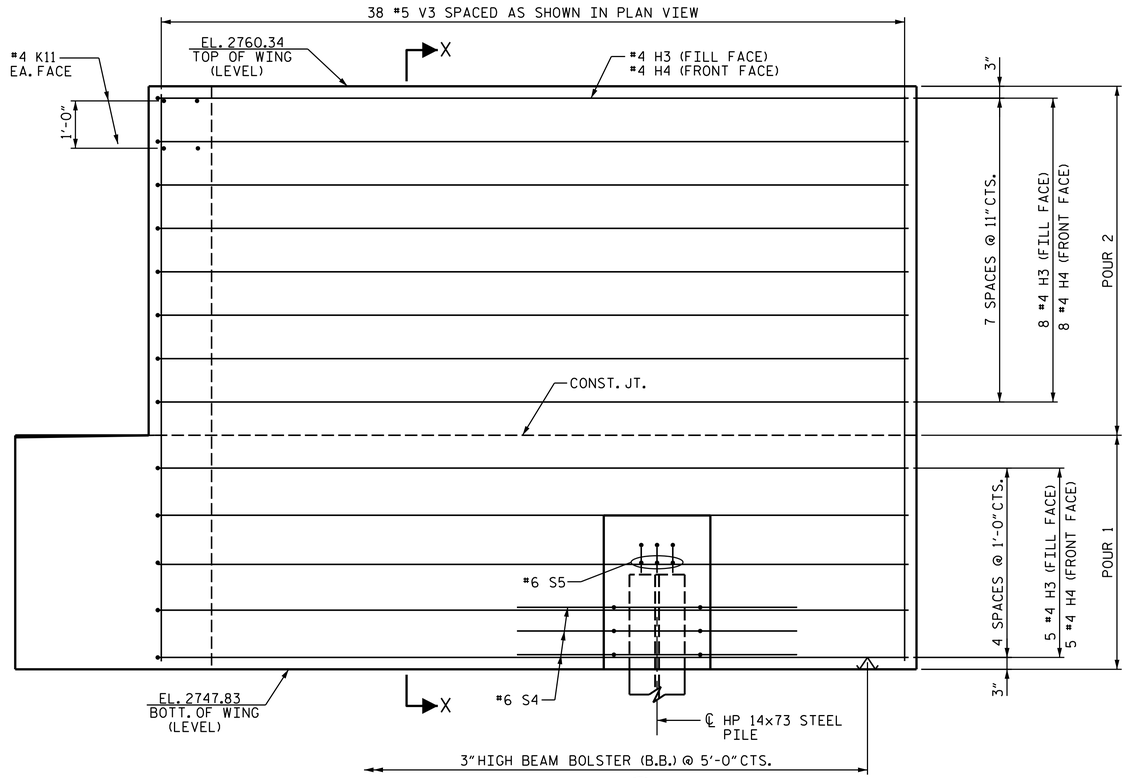

ELEVATION OF WING (W4)

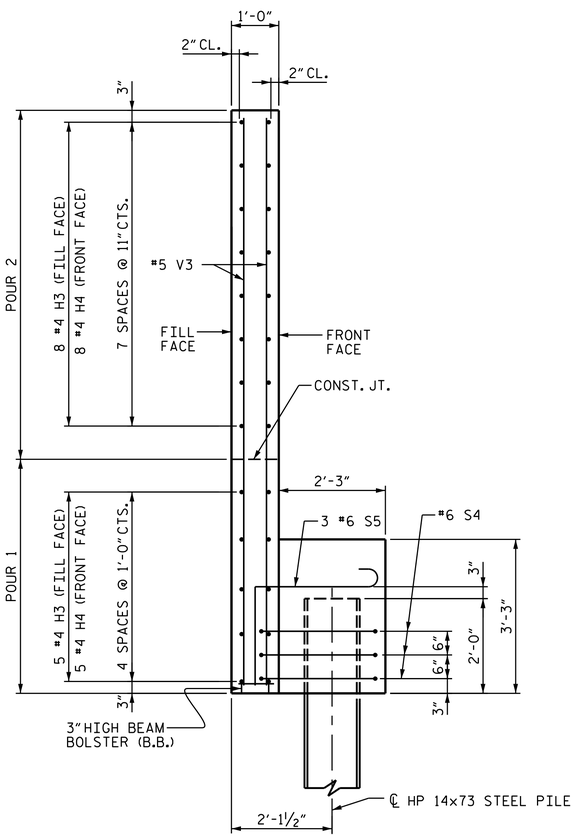

SECTION X-X

PROJECT NO. R-2566BA

WATAUGA COUNTY

STATION: 164+30.00-L-

SHEET 4 OF 10

STATE OF NORTH CAROLINA
DEPARTMENT OF TRANSPORTATION
RALEIGH

SUBSTRUCTURE

END BENT 2
STAGE I WINGS

NORTH CAROLINA PROFESSIONAL SEAL 20125 ENGINEER MARSHALL G. CHEEK, JR.

Marshall G. Cheek, Jr.
5FBCC2F3A4DC413
9/30/2021 | 1:43 PM EDT

DOCUMENT NOT CONSIDERED FINAL UNLESS ALL SIGNATURES COMPLETED

TGS ENGINEERS
804-C N. LAFAYETTE ST
SHELBY, NC 28150
PH (704) 476-0003
CORP. LICENSE NO.: C-0275

REVISIONS						SHEET NO.
NO.	BY:	DATE:	NO.	BY:	DATE:	S-68
1			3			TOTAL SHEETS
2			4			79

DRAWN BY :	NMW	DATE :	3/19
CHECKED BY :	RAR	DATE :	6/19
DESIGN ENGINEER OF RECORD :	TBE	DATE :	6/19