BRIDGE DETAILS

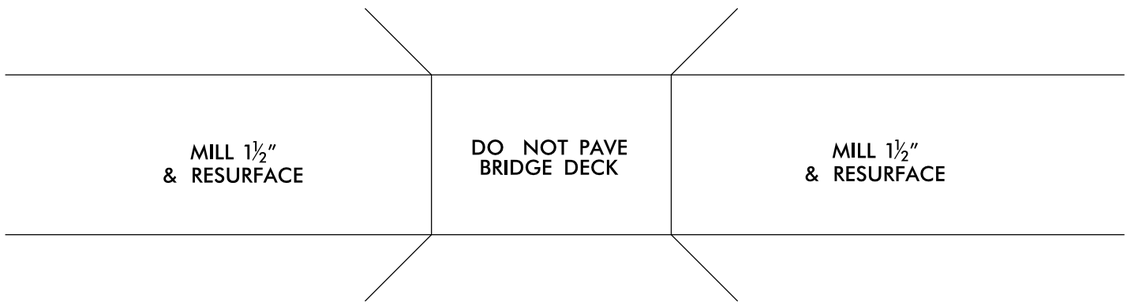

BRIDGE DRAWING TO BE USED FOR
MAP 5 SR 2080 (OLD US 1) BRIDGE #210

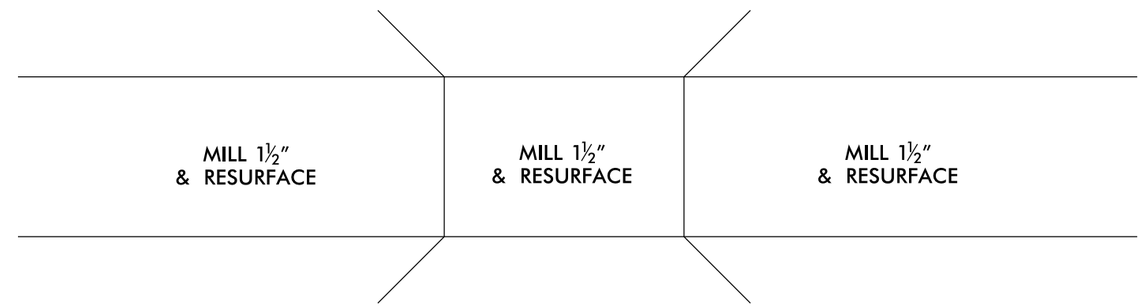

BRIDGE DRAWING TO BE USED FOR
MAP 11 SAUNDERS BLVD BRIDGE #187

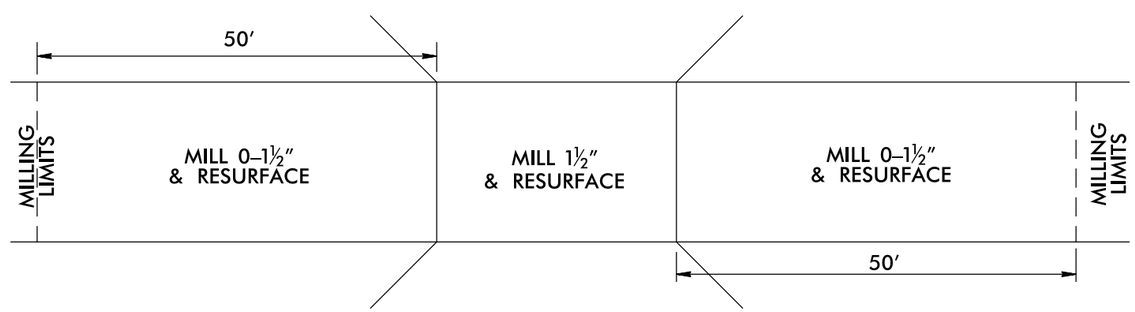

BRIDGE DRAWING TO BE USED FOR
MAP 17 FARM LIFE SCHOOL RD BRIDGE #131
* MILLING FOR APPROACHES SHALL BE PAID FOR UNDER INCIDENTAL MILLING

17-SEP-2021 11:24
2021-2022 Resurfacing\Moore_November2021_Submittal\Moore_November2021_Maps_Typ.dgn
ketts AT DIV8-3036051