DocuSign Envelope ID: 800A2A92-35D2-4362-8BCF-65B2F39F0D8C

5/14/99

PROJECT REFERENCE NO.	SHEET NO.
U-4405A	2C-16

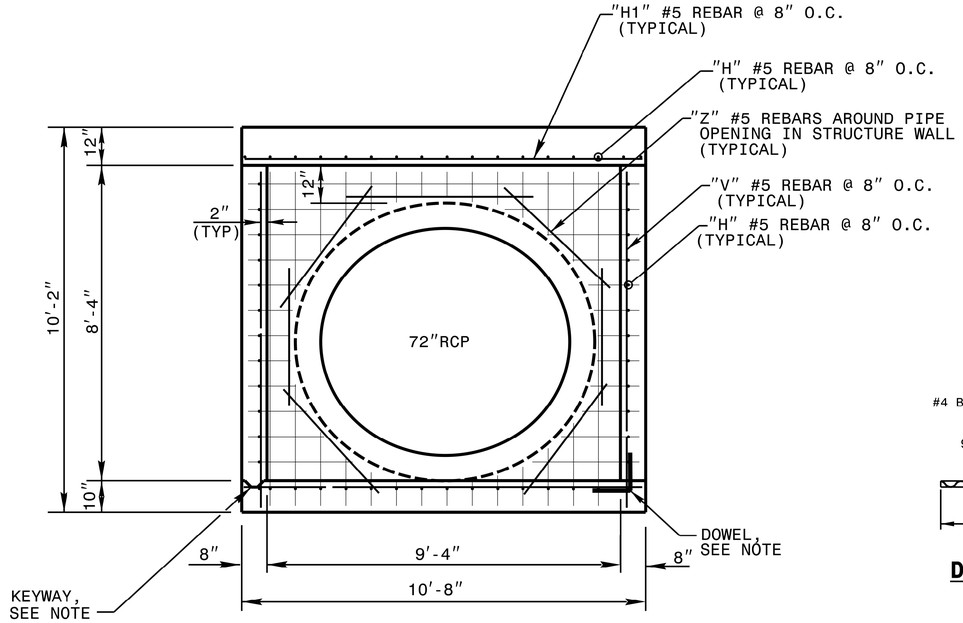

SECTION A-A

GENERAL NOTES:

USE CLASS "B" CONCRETE THROUGHOUT.

OPTIONAL CONSTRUCTION - MONOLITHIC POUR, 2" KEYWAY, OR #4 BAR DOWELS AT 12" CENTERS OR BRICK/BLOCK WALLS AS DIRECTED BY THE ENGINEER.

USE FORMS FOR THE CONSTRUCTION OF THE BOTTOM SLAB.

BOX DIMENSIONS MAY BE FIELD ADJUSTED AS DIRECTED BY THE ENGINEER.

2" MINIMUM CONCRETE COVERAGE ON ALL REBAR.

BILL OF MATERIALS

BAR	NO.	SIZE	LENGTH	WEIGHT
H	42	#5	10'-8"	467
H1	48	#5	10'-4"	517
V	62	#5	8'-10"	571
Z	21	#5	5'-0"	110
TOTAL REINF. STEEL (LBS.)				1665
TOTAL CONC. (CU. YDS.)				* 16.3

* NO DEDUCTION HAS BEEN MADE FOR PIPES

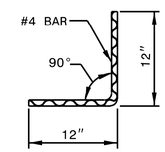

DOWEL

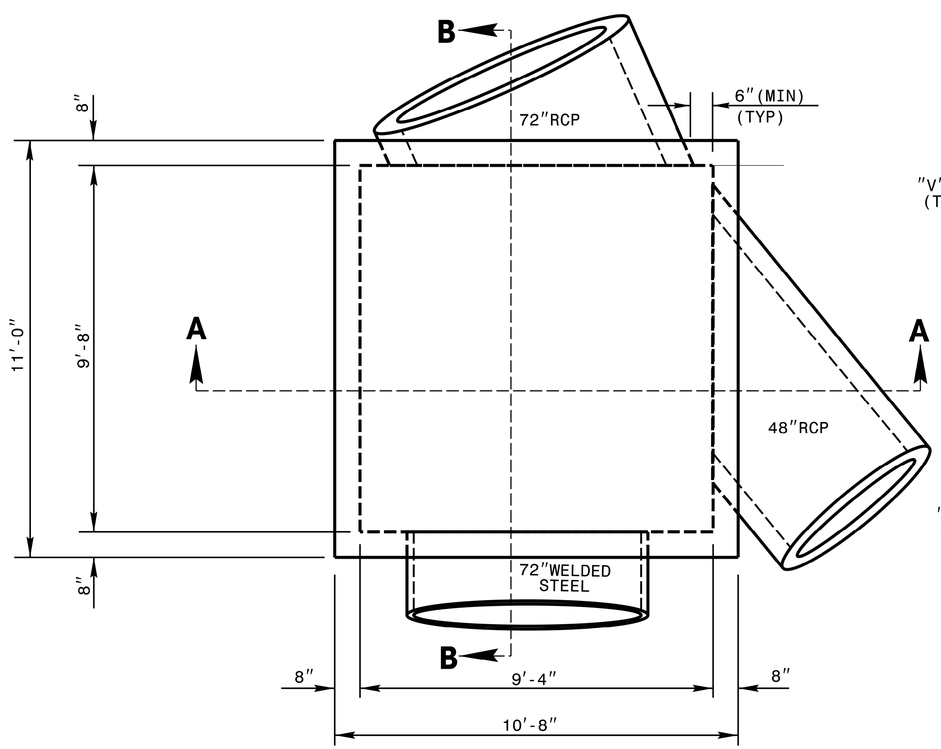

PLAN VIEW

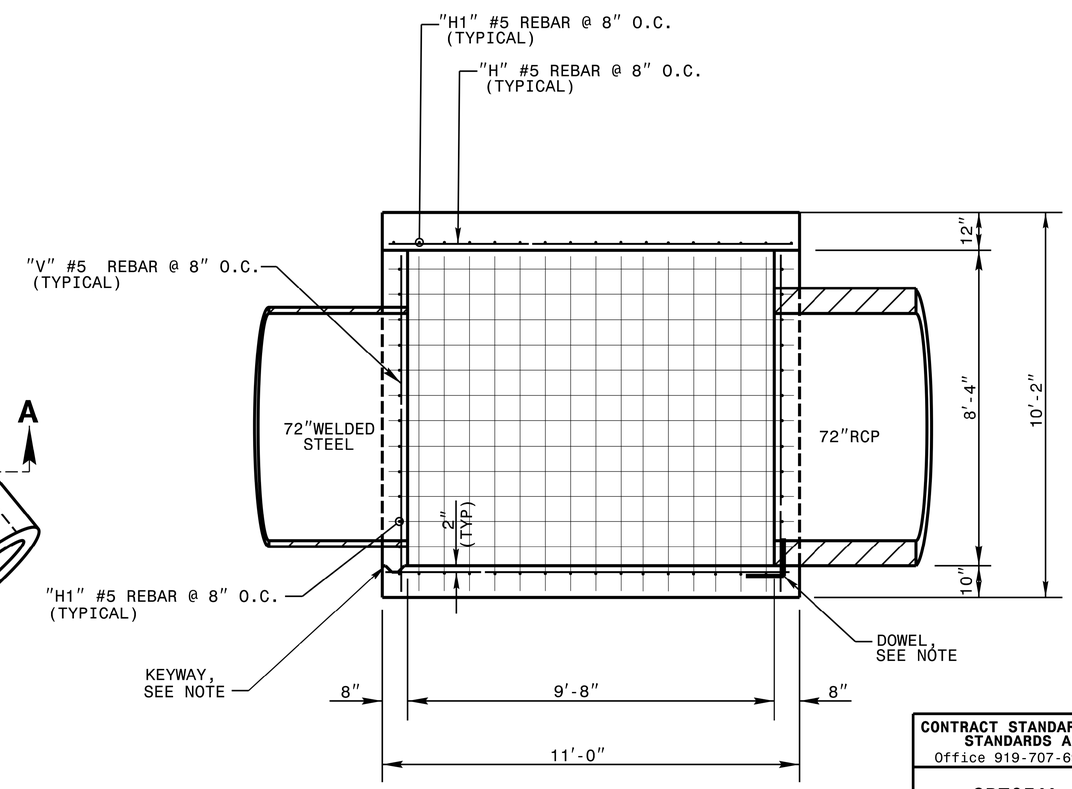

SECTION B-B

NORTH CAROLINA PROFESSIONAL SEAL 022966 ENGINEER Jason S. Hawkins

DocuSigned by: 7/1/2021

DOCUMENT NOT CONSIDERED FINAL UNLESS ALL SIGNATURES COMPLETED

CONTRACT STANDARDS & DEVELOPMENT UNIT
STANDARDS AND SPECIAL DESIGN
Office 919-707-6950 FAX 919-250-4119

SPECIAL JUNCTION BOX WITH SLAB LID

ORIGINAL BY: DATE:
MODIFIED BY: kkempf DATE: 02/23/18
CHECKED BY: DATE:
FILE SPEC.: detail/kkempf/english/u4405 72jb.dgn

$$$$$$SYSTIME$$$$$$
$$$$$$DGN$$$$$$
$$$$$$USERNAME$$$$$$