DocuSign Envelope ID: A6CA4A6A-1E55-480F-9586-FB54B0CE982C

8/17/99

Hinged Grate

30″ Pipe
2:1 Slope

FOREBAY #4 –I26– 470+65 RT

SHEET 3 OF 3
(NOT TO SCALE)

PROJECT REFERENCE NO.	SHEET NO.
15614.1075010	2D-26
R/W SHEET NO.	

HYDRAULICS ENGINEER

NORTH CAROLINA PROFESSIONAL ENGINEER SEAL 044158 BENJAMIN J. HENEGAR

4/7/2021

DOCUMENT NOT CONSIDERED FINAL UNLESS ALL SIGNATURES COMPLETED

TGS ENGINEERS
804-C N. LAFAYETTE ST
SHELBY, NC 28150
PH (704) 476-0003
CORP. LICENSE NO.: C-0275

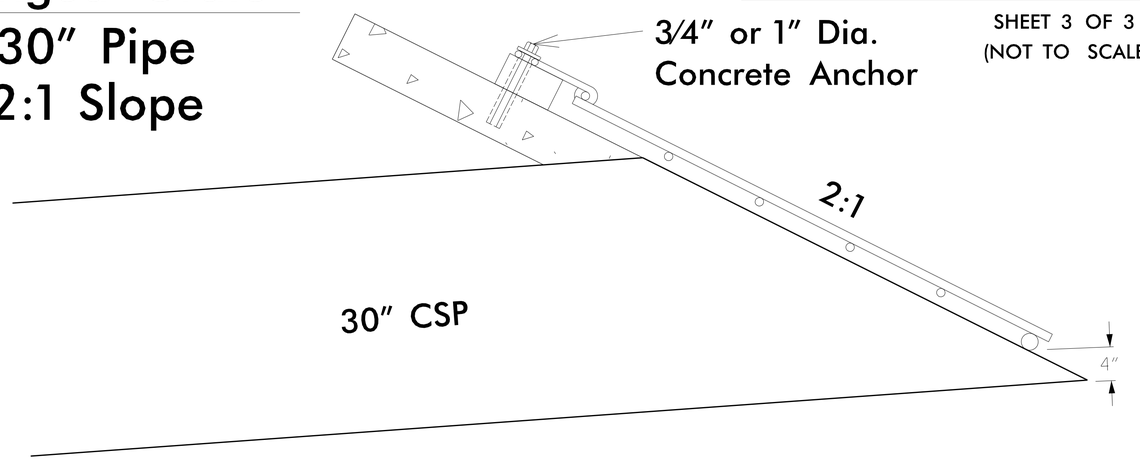

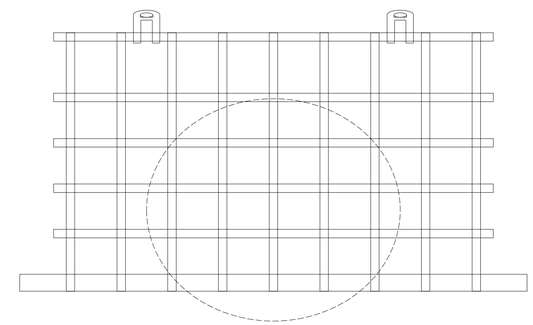

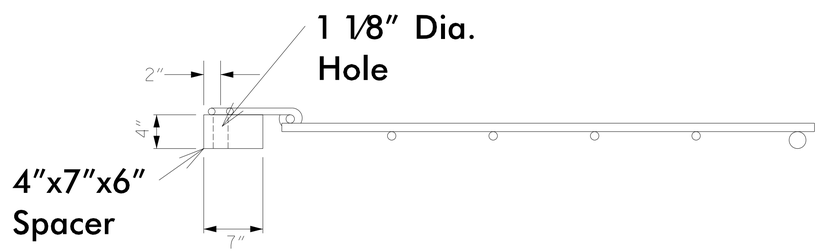

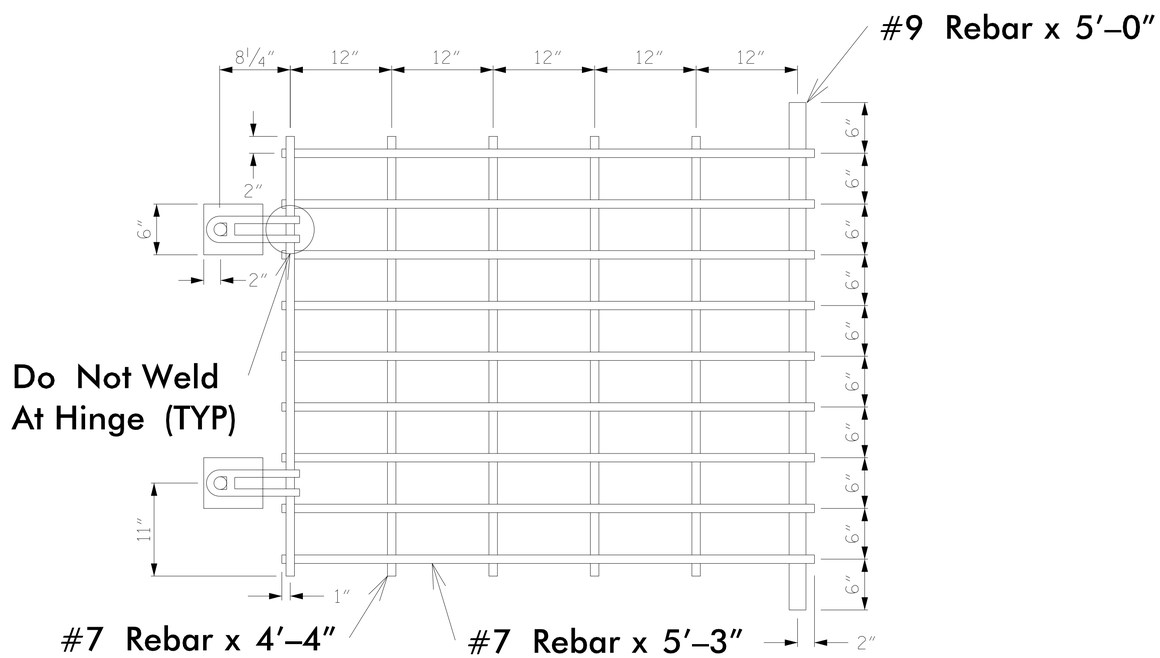

HINGED GRATE NOTES:

1. ALL JOINTS, EXCEPT AS NOTED, SHALL BE FULLY WELDED AROUND JOINT WITH A MINIMUM OF A 1/4″ BEAD.
2. GRATE SHALL BE REBAR AND GALVANIZED IN ACCORDANCE WITH ASTM A–153.
3. SPACER SHALL CONFORM TO AASHTO M270 GRADE 36. AFTER FABRICATION, HOT–DIP GALVANIZE SPACER IN ACCORDANCE WITH AASHTO M111.
4. USE CONCRETE ANCHORS CONSISTING OF A STUD BOLT WITH NUT AND WASHER. USE STUDS THREADED ON ONE END AND HAVING AN EXPANDED WEDGE ASSEMBLY POSITIONED AROUND A TAPERED AREA AT THE OTHER END. USE ANCHORS WHICH PROVIDE A MINIMUM SAFE HOLDING POWER OF 2875 LBS. FOR A 3/4″ OR 1″ DIAMETER BOLT. CALCULATE HOLDING POWER BASED ON 1/4 THE ACTUAL HOLDING POWER OF THE ANCHOR IN 3500 PSI CONCRETE AS DETERMINED BY AN APPROVED COMMERCIAL TESTING LABORATORY.
5. USE ANCHORS GALVANIZED IN ACCORDANCE WITH ASTM A–153. SIZE HOLES FOR THE CONCRETE ANCHORS IN ACCORDANCE WITH THE ANCHOR MANUFACTURER'S RECOMMENDATIONS. DRILL HOLES WITH A CARBIDE OR DIAMOND TIPPED MASONRY BIT POWERED BY A ROTARY OR ROTARY IMPACT DRILL. NO OTHER IMPACT TOOLS WILL BE PERMITTED. DRILL HOLES VERTICALLY. FURNISH DOCUMENTATION OF HOLE SIZE RECOMMENDED FOR THE SPECIFIED ANCHOR TO THE ENGINEER BEFORE DRILLING HOLES. THOROUGHLY CLEAN HOLES FOR ANCHORS OF ALL CONCRETE CHIPS, DUST, GREASE, OIL, ETC. BEFORE ANCHORS ARE INSTALLED. REPAIR ALL DAMAGE CAUSED BY THIS WORK TO THE SATISFACTION OF THE ENGINEER.
6. FOR HINGED GRATE, SEE SPECIAL PROVISIONS.

4/7/2021
X:\NCDOT\I-26 Howard Gap Rd Rehab\Drainage\I-26 Howards Gap_Hyd_Forebay_4_PSH.dgn
jsarrisenegar