DocuSign Envelope ID: 61A6E581-6AA9-4DC3-85FE-6DD2F5198ED9

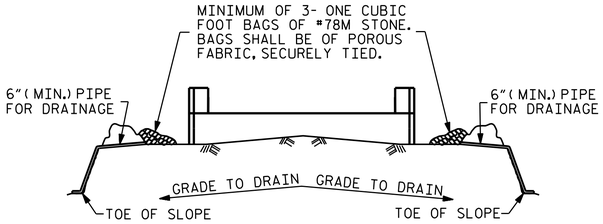

BAGGED STONE AND PIPE SHALL BE PLACED IMMEDIATELY AFTER COMPLETION OF END BENT EXCAVATION. PIPE MAY BE EITHER CONCRETE, CORRUGATED STEEL, CORRUGATED ALUMINUM ALLOY, OR CORRUGATED PLASTIC. PERFORATED PIPE WILL NOT BE ALLOWED.

BAGGED STONE SHALL REMAIN IN PLACE UNTIL THE ENGINEER DIRECTS THAT IT BE REMOVED. THE CONTRACTOR SHALL REMOVE AND DISPOSE OF SILT ACCUMULATIONS AT BAGGED STONE WHEN SO DIRECTED BY THE ENGINEER. BAGS SHALL BE REMOVED AND REPLACED WHENEVER THE ENGINEER DETERMINES THAT THEY HAVE DETERIORATED AND LOST THEIR EFFECTIVENESS.

NO SEPARATE PAYMENT WILL BE MADE FOR THIS WORK AND THE ENTIRE COST OF THIS WORK SHALL BE INCLUDED IN THE UNIT CONTRACT PRICE BID FOR THE SEVERAL PAY ITEMS.

TEMPORARY DRAINAGE AT END BENT

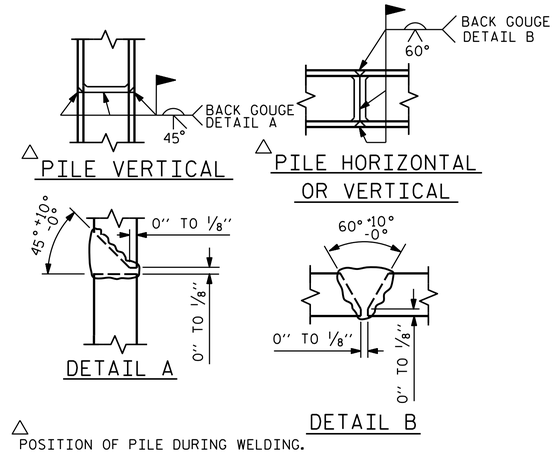

△ POSITION OF PILE DURING WELDING.

PILE SPLICE DETAILS

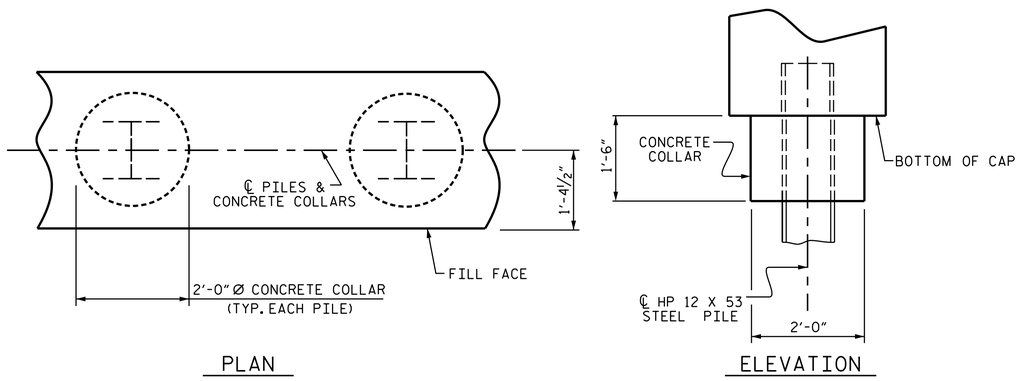

CORROSION PROTECTION FOR STEEL PILES DETAIL

(END BENT No. 1 SHOWN, END BENT No. 2 SIMILAR BY ROTATION)

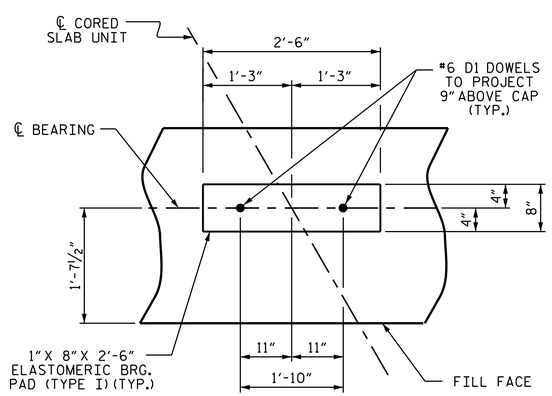

DETAIL "A"

(END BENT No. 1 SHOWN, END BENT No. 2 SIMILAR BY ROTATION)

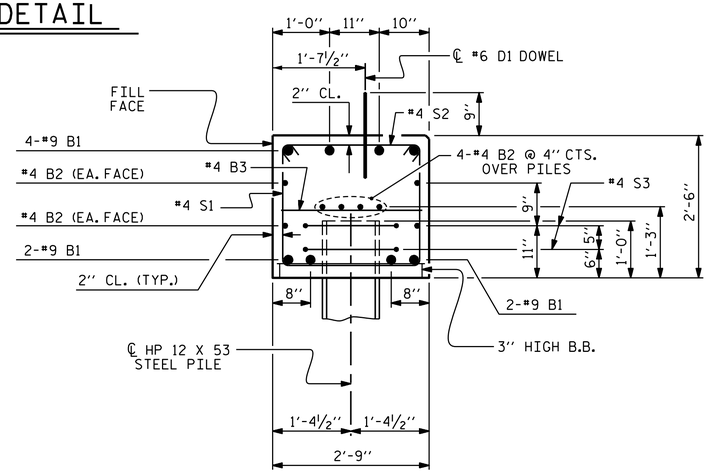

SECTION A-A

(CONCRETE COLLAR NOT SHOWN FOR CLARITY. SEE "CORROSION PROTECTION FOR STEEL PILES DETAIL.")

BAR TYPES

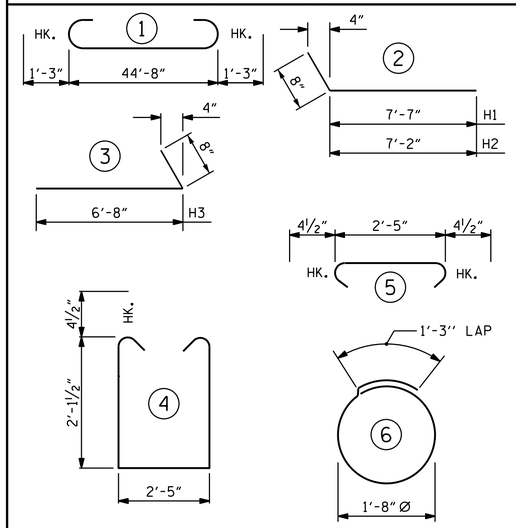

ALL BAR DIMENSIONS ARE OUT TO OUT.

END BENT No. 1	END BENT No. 2
HP 12 X 53 STEEL PILES NO: 7 LIN. FT.= 385	HP 12 X 53 STEEL PILES NO: 7 LIN. FT.= 490
PILE DRIVING EQUIPMENT SETUP FOR HP 12 X 53 STEEL PILES NO: 7 EA.	PILE DRIVING EQUIPMENT SETUP FOR HP 12 X 53 STEEL PILES NO: 7 EA.
PILE REDRIVES NO: 3 EA.	PILE REDRIVES NO: 3 EA.

BILL OF MATERIAL FOR ONE END BENT

BAR	NO.	SIZE	TYPE	LENGTH	WEIGHT
B1	8	#9	1	47'-2"	1283
B2	16	#4	STR	23'-8"	253
B3	12	#4	STR	2'-5"	19
D1	22	#6	STR	1'-6"	50
H1	6	#4	2	8'-3"	33
H2	6	#4	2	7'-10"	31
H3	12	#4	3	7'-4"	59
K1	12	#4	STR	3'-3"	26
S1	56	#4	4	7'-5"	277
S2	56	#4	5	3'-2"	118
S3	14	#4	6	6'-6"	61
V1	47	#4	STR	4'-8"	147

REINFORCING STEEL (FOR ONE END BENT) 2357 LBS.

CLASS A CONCRETE BREAKDOWN (FOR ONE END BENT)

POUR #1 CAP, LOWER PART OF WINGS & COLLARS 13.9 C.Y.

POUR #2 UPPER PART OF WINGS 1.9 C.Y.

TOTAL CLASS A CONCRETE 15.8 C.Y.

PROJECT NO. 17BP.2.R.92
PITT COUNTY
STATION: 13+78.50 -L-

SHEET 4 OF 4

STATE OF NORTH CAROLINA
DEPARTMENT OF TRANSPORTATION
RALEIGH

SUBSTRUCTURE

END BENT No. 1 & 2 DETAILS

NORTH CAROLINA PROFESSIONAL SEAL 20125 ENGINEER MARSHALL C. CHECK, JR.
DocuSigned by: Marshall C. Check, Jr.
SFBCC2F3A4DC413...
1/6/020

DOCUMENT NOT CONSIDERED FINAL UNLESS ALL SIGNATURES COMPLETED

TGS ENGINEERS
706 HILLSBOROUGH STREET
SUITE 200
RALEIGH, NC 27603
PH (919) 773-8887
CORP. LICENSE NO.: C-0275

REVISIONS							
NO.	BY:	DATE:	NO.	BY:	DATE:	SHEET NO.	S-14
1			3			TOTAL SHEETS	19
2			4				

ASSEMBLED BY :	ZCS	DATE :	09/19
CHECKED BY :	MGC	DATE :	09/19
DRAWN BY : DGE	12/09	REV. 4/17	MAA/THC
CHECKED BY : MKT	01/10		

10/10/2019
X:\NCDOT\B-4788\Structures\90%\DGN\401_029_B-4788_SMU_EB4_730171.dgn
User:ZSmith

STD. NO. EB_33_120S