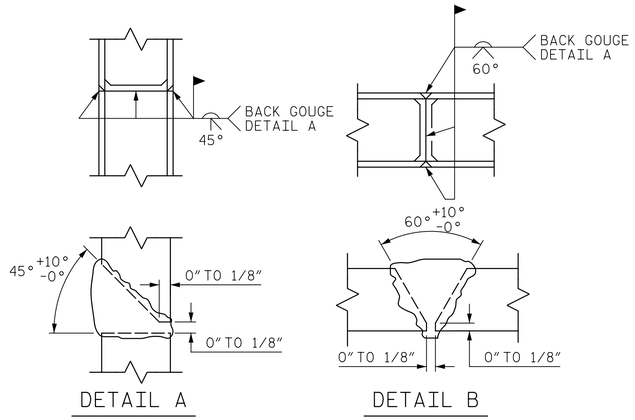

PILE SPLICE DETAILS

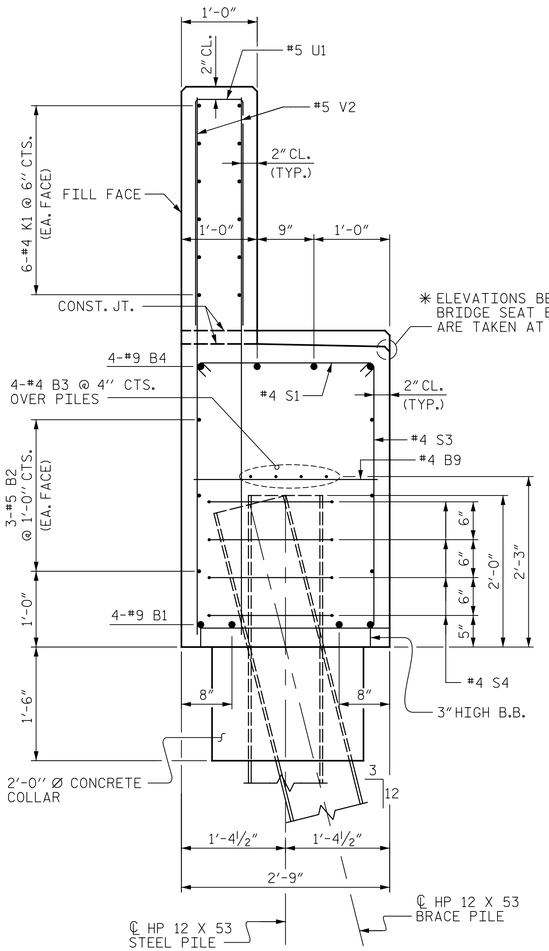

SECTION A-A

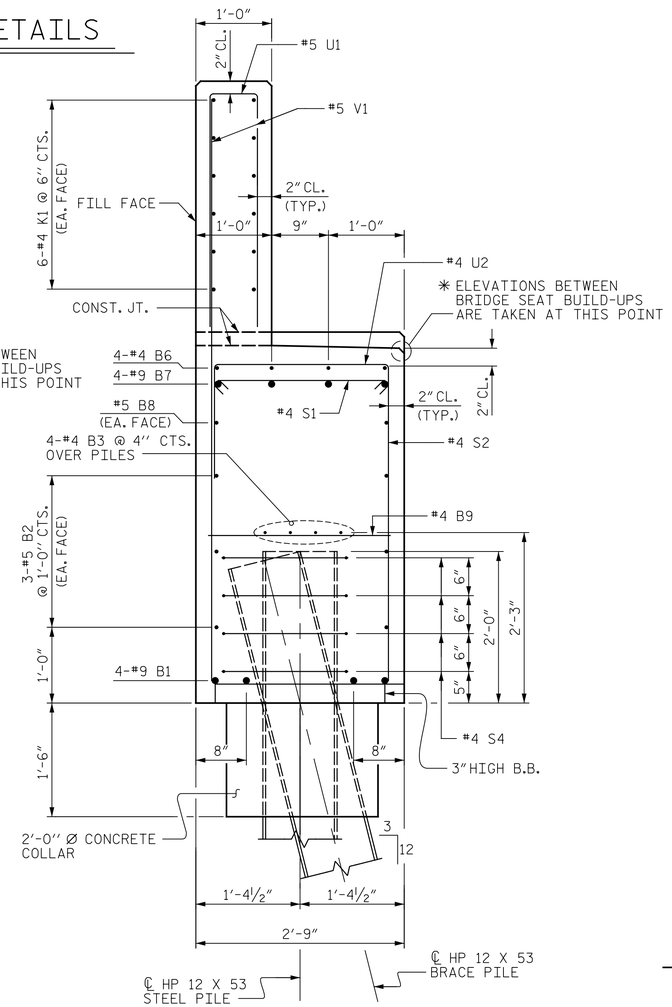

SECTION B-B

BAR TYPES

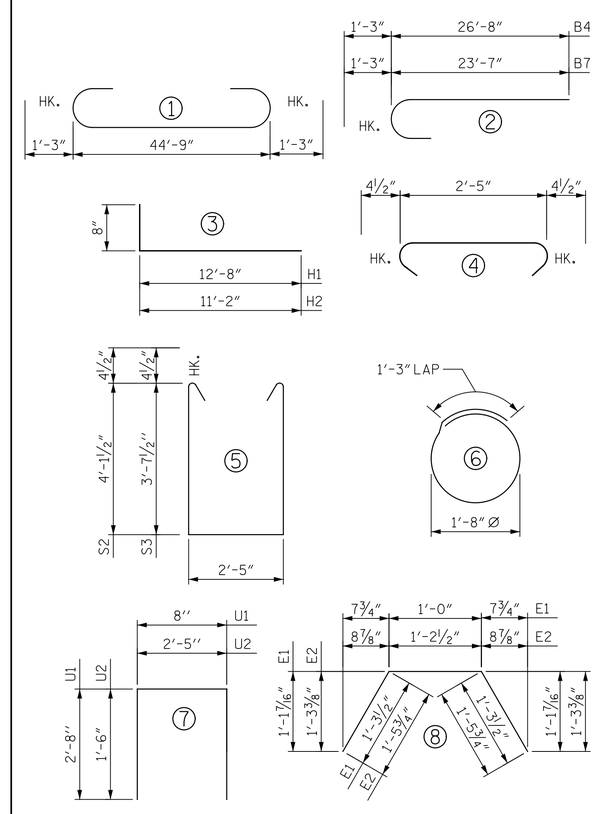

ALL BAR DIMENSIONS ARE OUT TO OUT.

BILL OF MATERIAL

BAR	NO.	SIZE	TYPE	LENGTH	WEIGHT
B1	4	#9	1	47'-3"	643
B2	6	#5	STR	44'-11"	281
B3	8	#4	STR	23'-8"	126
B4	4	#9	2	27'-11"	380
B5	8	#4	STR	2'-5"	13
B6	4	#4	STR	15'-7"	42
B7	4	#9	2	24'-10"	338
B8	2	#5	STR	21'-3"	44
B9	14	#4	STR	2'-5"	23
E1	4	#4	8	3'-7"	10
E2	4	#4	8	4'-2"	11
H1	38	#5	3	13'-4"	528
H2	34	#5	3	11'-10"	420
K1	12	#4	STR	23'-8"	379
K2	12	#4	STR	3'-6"	28
S1	40	#4	4	3'-2"	85
S2	21	#4	5	11'-5"	160
S3	19	#4	5	10'-5"	132
S4	24	#4	6	6'-6"	104
U1	38	#5	7	6'-0"	238
U2	16	#4	7	5'-5"	58
V1	14	#5	STR	7'-4"	107
V2	12	#5	STR	6'-11"	87
V3	12	#5	STR	6'-6"	81
V4	18	#4	STR	9'-4"	112
V5	10	#4	STR	9'-3"	62
V6	6	#4	STR	9'-2"	37
V7	18	#4	STR	8'-2"	98
V8	8	#4	STR	8'-1"	43
V9	6	#4	STR	8'-0"	32
REINFORCING STEEL				LBS.	4,702

CLASS A CONCRETE			
POUR #1	CAP, LOWER WINGS & COLLARS	CU. YD.	25.4
POUR #2	BACKWALL & UPPER WINGS	CU. YD.	9.7
TOTAL:		CU. YD.	35.1
HP 12 X 53 STEEL PILES			
NO. 6		LIN. FT.	330.0

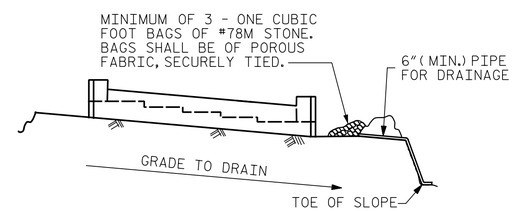

BAGGED STONE AND PIPE SHALL BE PLACED IMMEDIATELY AFTER COMPLETION OF END BENT EXCAVATION. PIPE MAY BE EITHER CONCRETE, CORRUGATED STEEL, CORRUGATED ALUMINUM ALLOY, OR CORRUGATED PLASTIC. PERFORATED PIPE WILL NOT BE ALLOWED.

BAGGED STONE SHALL REMAIN IN PLACE UNTIL THE ENGINEER DIRECTS THAT IT BE REMOVED. THE CONTRACTOR SHALL REMOVE AND DISPOSE OF SILT ACCUMULATIONS AT BAGGED STONE WHEN SO DIRECTED BY THE ENGINEER. BAGS SHALL BE REMOVED AND REPLACED WHENEVER THE ENGINEER DETERMINES THAT THEY HAVE DETERIORATED AND LOST THEIR EFFECTIVENESS.

NO SEPARATE PAYMENT WILL BE MADE FOR THIS WORK AND THE ENTIRE COST OF THIS WORK SHALL BE INCLUDED IN THE UNIT CONTRACT PRICE FOR THE SEVERAL PAY ITEMS.

TEMPORARY DRAINAGE AT END BENT

PROJECT NO. B-4626
STANLY, ROWAN AND DAVIDSON COUNTY
STATION: 45+22.65 -EBL-

SHEET 3 OF 3

STATE OF NORTH CAROLINA
DEPARTMENT OF TRANSPORTATION
RALEIGH

SUBSTRUCTURE
END BENT 1

NORTH CAROLINA PROFESSIONAL SEAL 020208 ENGINEER ERIC B. NELSON

DocuSigned by: Eric B. Nelson Jr. 9/2/2021
ACB8082119074CD...

DOCUMENT NOT CONSIDERED FINAL UNLESS ALL SIGNATURES COMPLETED

REVISIONS								SHEET NO.
NO.	BY:	DATE:	NO.	BY:	DATE:			S1-59
1			3					TOTAL SHEETS
2			4					125

PLANS PREPARED BY:
Gannett Fleming
Excellence Delivered As Promised
One Glenwood Avenue
Suite 900
Raleigh, NC 27603
(919) 420-7660
NC Lic. No. F-0270

DRAWN BY :	J. MYA	DATE :	04/2021
CHECKED BY :	J. YANNACCONE	DATE :	05/2021
DESIGN ENGINEER OF RECORD:	R. NELSON	DATE :	05/2021

pw:\\gfnet-pw.bentley.com:gfnet-pw-01\Documents\Projects\63639\Task 010 B-4626\Discipline\Struct\DGN\Rowan 3\Archives\Delete\401_121_B4626_SMU_E103_790003_059
9/2/2021 4:03:29 PM pdf_color_gfclt_FS.plt Rowan.pen.tbl