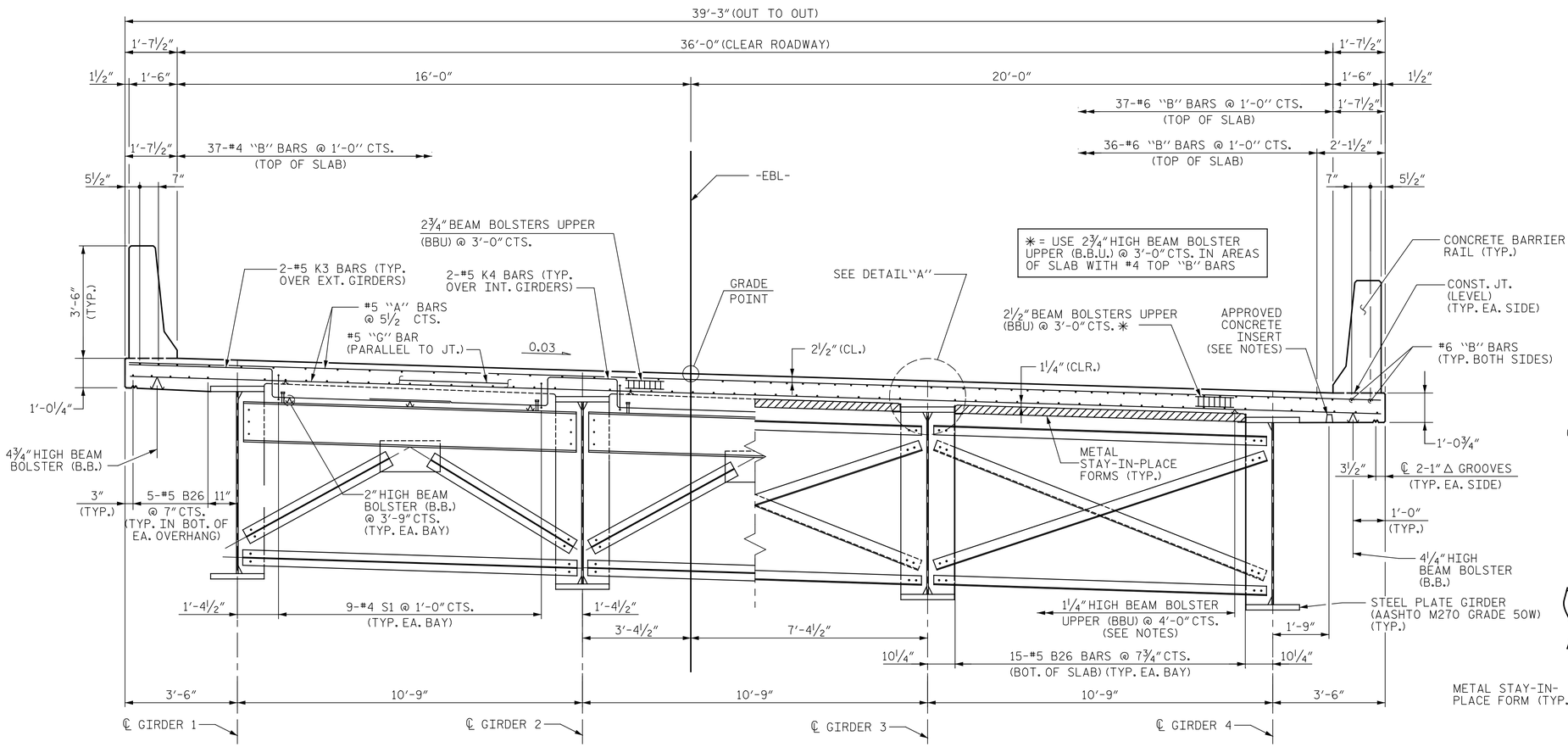

HALF SECTION AT END DIAPHRAGM
(TYP. @ BENTS 5 & 8)

HALF SECTION AT INTERMEDIATE & BENT DIAPHRAGM
(TYP. @ BENTS 6 & 7, AND IN SPANS)

TYPICAL SECTION

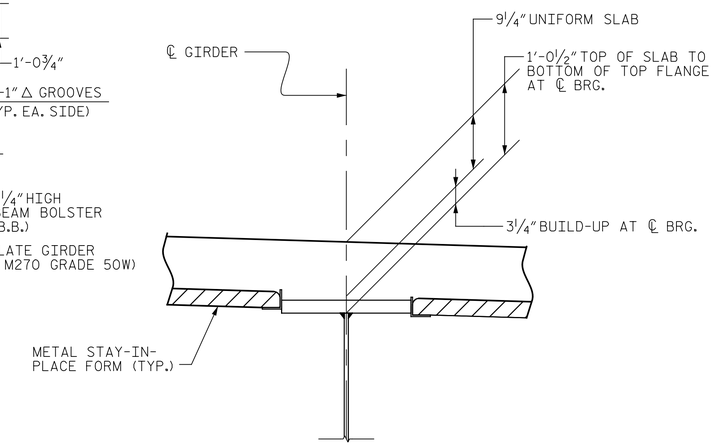

DETAIL "A"

PROJECT NO. B-4626
STANLY, ROWAN AND DAVIDSON COUNTY
STATION: 45+22.65 -EBL-

SHEET 2 OF 3

STATE OF NORTH CAROLINA
DEPARTMENT OF TRANSPORTATION
RALEIGH

SUPERSTRUCTURE
TYPICAL SECTION
UNIT 2

NORTH CAROLINA PROFESSIONAL SEAL 020208 ENGINEER ERIC B. NELSON JR.

DocuSigned by: Eric B. Nelson Jr. 9/2/2021
ACB808219D74CD...

DOCUMENT NOT CONSIDERED FINAL UNLESS ALL SIGNATURES COMPLETED

REVISIONS							SHEET NO.
NO.	BY:	DATE:	NO.	BY:	DATE:		S1-15
1			3				TOTAL SHEETS
2			4				125

PLANS PREPARED BY:
Gannett Fleming
Excellence Delivered As Promised
One Glenwood Avenue
Suite 900
Raleigh, NC 27603
(919) 420-7660
NC Lic. No. F-0270

DRAWN BY :	T. FORD	DATE :	05/2020
CHECKED BY :	R. FISHER	DATE :	05/2021
DESIGN ENGINEER OF RECORD:	R. NELSON	DATE :	05/2021

pw:\\gfnet-pw.bentley.com:gfnet-pw-01\Documents\Projects\63639\Task 010 B-4626\Discipline\Struct\DGN\Rowan 3\Archives\Delete\401_033_B4626_SMU_TS2_790003_015
9/2/2021 3:58:36 PM pdf_color_gfolt_FS.plt Rowan.pen.tbl