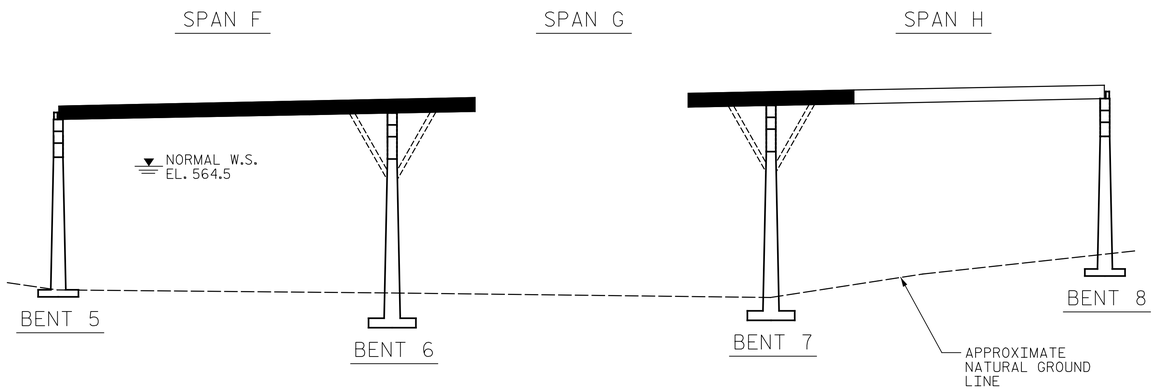


UNIT 2 - STEP 4 GIRDER ERECTION

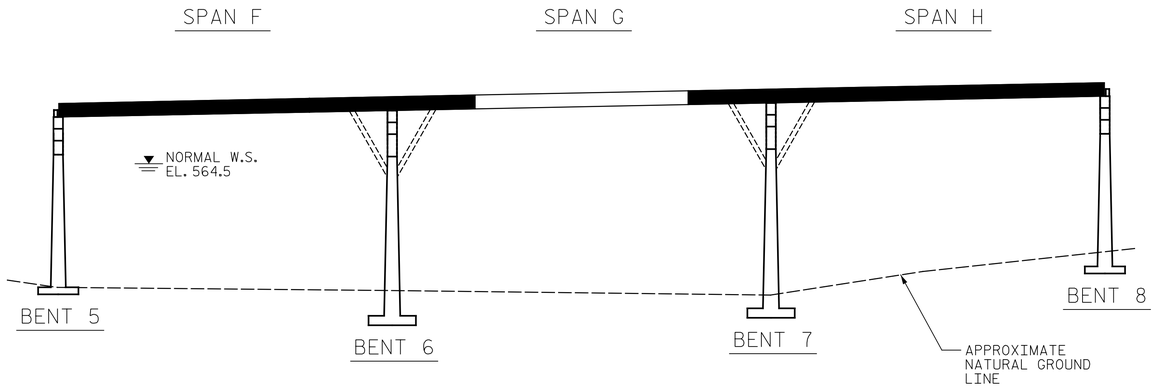


UNIT 2 - STEP 5 GIRDER ERECTION

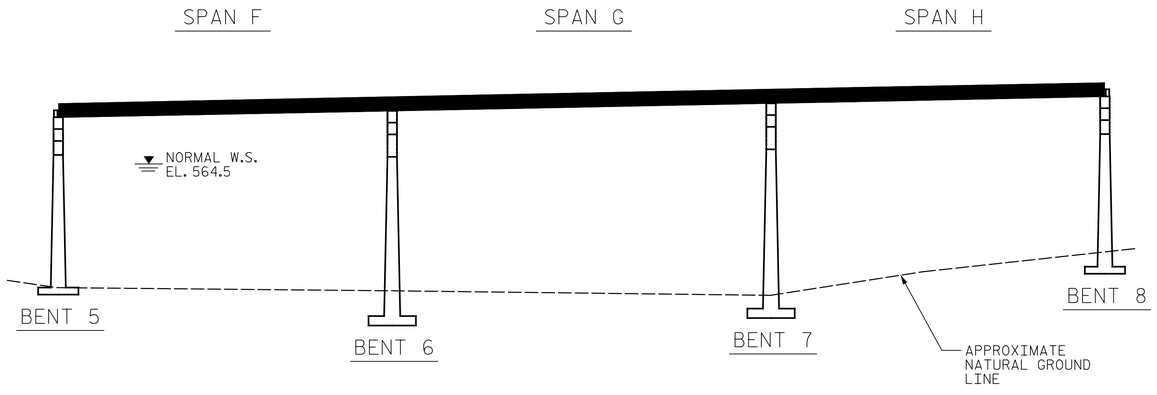


UNIT 2 - STEP 6 GIRDER ERECTION

PROJECT NO. B-4626
STANLY, ROWAN
AND DAVIDSON COUNTY
STATION: 45+22.65 -EBL-

SHEET 3 OF 4

STATE OF NORTH CAROLINA
DEPARTMENT OF TRANSPORTATION
RALEIGH

GIRDER ERECTION
DETAILS
UNIT 2

NORTH CAROLINA PROFESSIONAL SEAL 020208 ENGINEER ERIC B. NELSON JR.

DocuSigned by: Eric B. Nelson Jr. 9/2/2021
ACB8082119D74CD...

DOCUMENT NOT CONSIDERED FINAL UNLESS ALL SIGNATURES COMPLETED

| REVISIONS | | | | | | SHEET NO. |
|---|---|---|---|---|---|---|
| NO. | BY: | DATE: | NO. | BY: | DATE: | S1-12 |
| 1 | | | 3 | | | TOTAL SHEETS |
| 2 | | | 4 | | | 125 |

PLANS PREPARED BY:
Gannett Fleming
Excellence Delivered As Promised
One Glenwood Avenue
Suite 900
Raleigh, NC 27603
(919) 420-7660
NC Lic. No. F-0270

| | | | |
|---|---|---|---|
| DRAWN BY : | T. FORD | DATE : | 05/2021 |
| CHECKED BY : | R. FISHER | DATE : | 05/2021 |
| DESIGN ENGINEER OF RECORD: | R. NELSON | DATE : | 05/2021 |

pw:\\gfnet-pw.bentley.com:gfnet-pw-01\Documents\Projects\63639\Task 010 B-4626\Discipline\Struct\DGN\Rowan 3\Archives\Delete\401_027_B4626_SMU_GE03_790003_012
9/2/2021 3:58:18 PM pdf_color_gfclt_FS.plt Rowan.pen.tbl