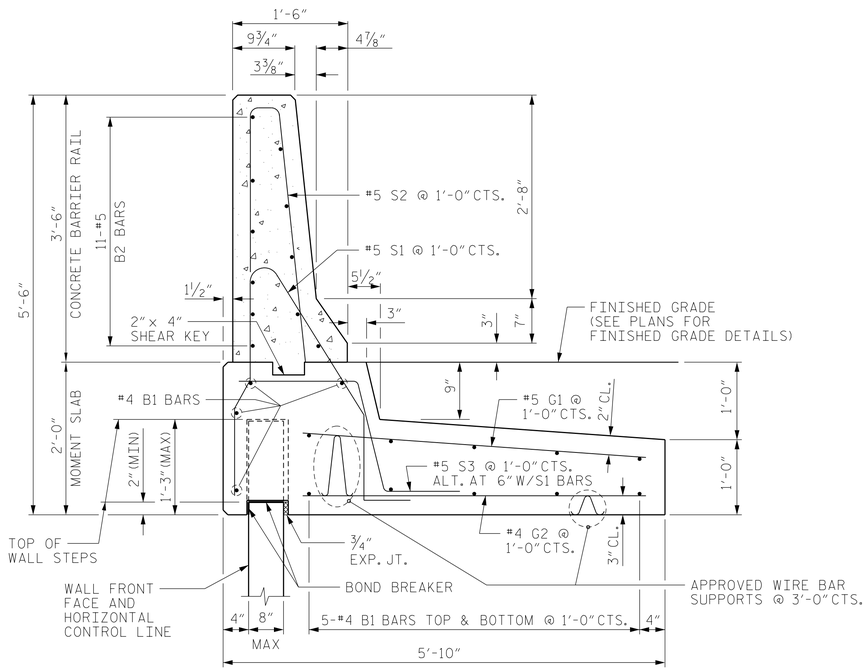

CONCRETE BARRIER RAIL WITH MOMENT SLAB

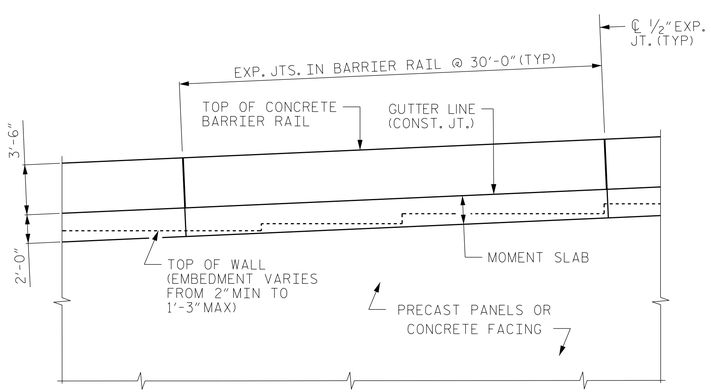

CONCRETE BARRIER RAIL WITH MOMENT SLAB - PARTIAL ELEVATION

NOTES:

FOR CONCRETE BARRIER RAIL WITH MOMENT SLAB, SEE SECTION 460 OF THE STANDARD SPECIFICATIONS.

CONCRETE BARRIER RAIL WITH MOMENT SLAB SHALL BE A MINIMUM OF 15' IN LENGTH.

EXPANSION JOINTS SHALL BE PLACED IN THE BARRIER RAIL AND MOMENT SLAB AT A MAXIMUM SPACING OF 30'.

GROOVED CONTRACTION JOINTS, 1/2" IN DEPTH, SHALL BE TOOLED IN ALL EXPOSED SURFACES OF THE BARRIER RAIL AND IN ACCORDANCE WITH ARTICLE 825-10(B) OF THE STANDARD SPECIFICATIONS. A CONTRACTION JOINT SHALL BE LOCATED AT EACH THIRD POINT BETWEEN BARRIER RAIL EXPANSION JOINTS. ONLY ONE CONTRACTION JOINT IS REQUIRED AT MID-POINT OF BARRIER RAIL SEGMENTS LESS THAN 20' IN LENGTH.

THE BARRIER RAIL SHALL NOT BE CAST UNTIL THE MOMENT SLAB HAS ATTAINED AN AGE OF THREE CURING DAYS OR A MINIMUM COMPRESSIVE STRENGTH OF 2,000 PSI. IN ADDITION, NO FILL MATERIAL, ASPHALT, OR CONSTRUCTION EQUIPMENT IS ALLOWED ON THE MOMENT SLAB PRIOR TO SATISFYING THE MINIMUM CONCRETE CURING AND STRENGTH REQUIREMENTS.

ALL REINFORCING STEEL IN THE BARRIER RAIL SHALL BE EPOXY COATED.

IF EXISTING OR FUTURE OBSTRUCTIONS SUCH AS FOUNDATIONS, BARRIERS, PIPES, INLETS OR UTILITIES WILL INTERFERE WITH CONCRETE BARRIER RAIL WITH MOMENT SLAB OR CONCRETE FACING FOR RETAINING WALL WILL BE THICKER THAN 8", CONCRETE BARRIER RAIL WITH MOMENT SLAB DETAILS SHALL BE REVISED AND SUBMITTED FOR APPROVAL.

CONCRETE BARRIER RAIL WITH MOMENT SLAB	
PAY LENGTH = 995	LIN FT

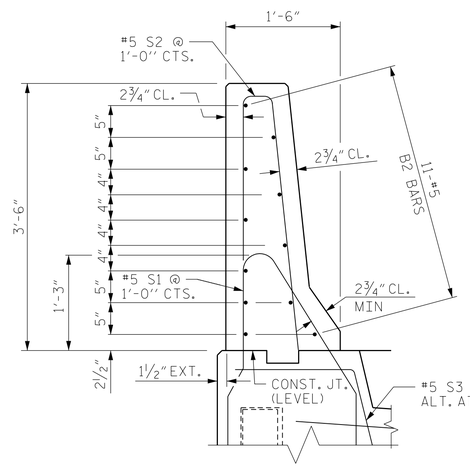

SECTION THRU RAIL

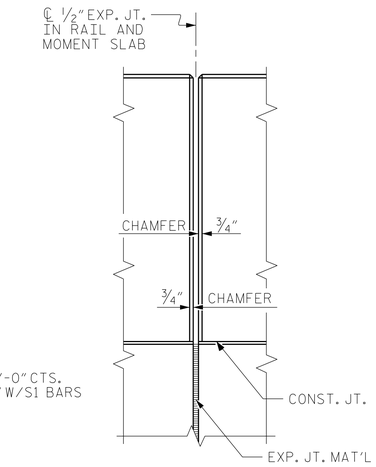

ELEV. @ EXP. JOINTS

BARRIER RAIL DETAILS

ENGINEER

NORTH CAROLINA PROFESSIONAL SEAL 032672 ENGINEER MICHAEL D. VALIQUETTE

DocuSigned by: Michael Valiquette 8/17/2021
EAF206B34AA64CE
SIGNATURE DATE

ENGINEER

SIGNATURE DATE

DOCUMENT NOT CONSIDERED FINAL UNLESS ALL SIGNATURES COMPLETED

BAR TYPES

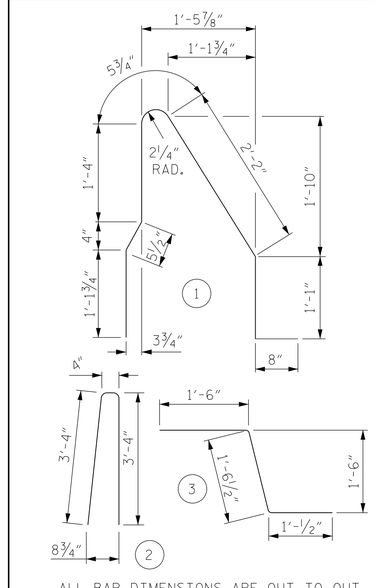

ALL BAR DIMENSIONS ARE OUT TO OUT

BILL OF MATERIAL

FOR ONE 30'-0" SECTION OF CONCRETE BARRIER RAIL WITH MOMENT SLAB

BAR	NO.	SIZE	TYPE	LENGTH	WEIGHT
B1	14	#4	STR	29'-7"	277
✳ B2	11	#5	STR	29'-7"	339
G1	31	#5	STR	4'-4"	140
G2	31	#4	STR	4'-4"	90
✳ S1	31	#5	1	7'-4"	237
✳ S2	31	#5	2	7'-0"	226
S3	30	#5	3	4'-1"	128
REINFORCING STEEL					635 LB
✳ EPOXY COATED REINFORCING STEEL					802 LB
CLASS AA CONCRETE BARRIER RAIL					4.1 CY
CLASS A CONCRETE MOMENT SLAB					9.1 CY
CONCRETE BARRIER RAIL WITH MOMENT SLAB					30 LIN FT

PROJECT NO.: R-5737

DAVIDSON COUNTY

STATION: -L- 66+14,47' LT TO 67+97,47' RT

SHEET 5 OF 5

ICE of CAROLINAS, PLLC

NORTH CAROLINA DEPARTMENT OF TRANSPORTATION DIVISION OF HIGHWAYS

GEOTECHNICAL ENGINEERING UNIT

CONCRETE BARRIER RAIL WITH MOMENT SLAB FOR PRECAST PANELS AND CONCRETE FACING

REVISIONS						SHEET NO.
NO.	BY	DATE	NO.	BY	DATE	
1			3			W-10
2			4			

PREPARED BY: MRS	DATE: 05/21
REVIEWED BY: MDV	DATE: 05/21