DocuSign Envelope ID: 02E905BF-708E-4CB6-B3B1-BA742E3439C0

PROJECT REFERENCE NO.	SHEET NO.
U-4906	Sig. 3.1

EDI MODEL 2018ECLip-NC CONFLICT MONITOR PROGRAMMING DETAIL

(remove jumpers and set switches as shown)

1-5, 1-6, 1-9, 1-11, 2-5, 2-6, 2-9, 2-11, 3-7, 3-8, 3-10, 3-12,
REMOVE DIODE JUMPERS 4-7, 4-8, 4-10, 4-12, 5-9, 5-11, 6-9, 6-11, 7-10, 7-12, 8-10, 8-12, 9-11, and 10-12.

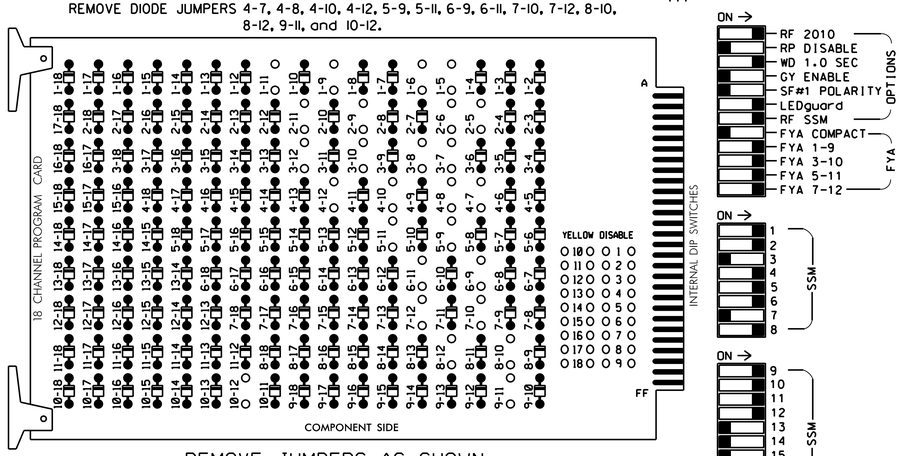

REMOVE JUMPERS AS SHOWN

■ = DENOTES POSITION OF SWITCH

NOTES:

1. Card is provided with all diode jumpers in place. Removal of any jumper allows its channels to run concurrently.
2. Ensure jumpers SEL2-SEL5 and SEL9 are present on the monitor board.
3. Ensure that Red Enable is active at all times during normal operation.
4. Integrate monitor with Ethernet network in cabinet.

NOTES

1. To prevent "flash-conflict" problems, insert red flash program blocks for all unused vehicle load switches in the output file. The installer shall verify that signal heads flash in accordance with the Signal Plans.
2. Program phases 4 and 8 for Dual Entry.
3. Enable Simultaneous Gap-Out for all Phases.
4. Program phases 2 and 6 for Variable Initial and Gap Reduction.
5. Program phase 4 for Gap Reduction.
6. Program phases 2 and 6 for Startup In Green.
7. Program phases 2 and 6 for Yellow Flash, and overlaps 1 and 2 as Wag Overlaps.
8. If this signal will be managed by an ATMS software, enable controller and detector logging for all enabled detectors.
9. The cabinet and controller are part of the Jacksonville Signal System.

EQUIPMENT INFORMATION

CONTROLLER.....2070E
CABINET.....332 W/AUX
SOFTWARE.....ECONOLITE OASIS
CABINET MOUNT.....BASE
OUTPUT FILE POSITIONS...18 WITH AUX. OUTPUT FILE
LOAD SWITCHES USED.....S1,S2,S4,S5,S7,S8,S10,S11,AUX S1, AUX S2,AUX S4,AUX S5
PHASES USED.....1,2,3,4,5,6,7,8
OVERLAP "A".....1+2
OVERLAP "B".....3+4
OVERLAP "C".....5+6
OVERLAP "D".....7+8

SIGNAL HEAD HOOK-UP CHART

LOAD SWITCH NO.	S1	S2	S3	S4	S5	S6	S7		S8	S9	S10	S11	S12	AUX S1	AUX S2	AUX S3	AUX S4	AUX S5	AUX S6
CMU CHANNEL NO.	1	2	13	3	4	14	5		6	15	7	8	16	9	10	17	11	12	18
PHASE	1	2	2 PED	3	4	4 PED	5		6	6 PED	7	8	8 PED	OLA	OLB	SPARE	OLC	OLD	SPARE
SIGNAL HEAD NO.	11★	82	21,22	NU	31★	41,42	NU	42	51★	61,62	NU	71★	81,82	NU	11★	31★	NU	51★	71★	NU
RED		✱	128			101		✱		134			107						
YELLOW			129		✱	102				135		✱	108						
GREEN			130			103				136			109						
RED ARROW														A121	A124		A114	A101	
YELLOW ARROW		126					132							A122	A125		A115	A102	
FLASHING YELLOW ARROW														A123	A126		A116	A103	
GREEN ARROW	127	127			118			133	133			124							

NU = Not Used

✱ Denotes install load resistor. See load resistor installation detail this sheet.

★ See pictorial of head wiring in detail this sheet.

FYA SIGNAL WIRING DETAIL

(wire signal head as shown)

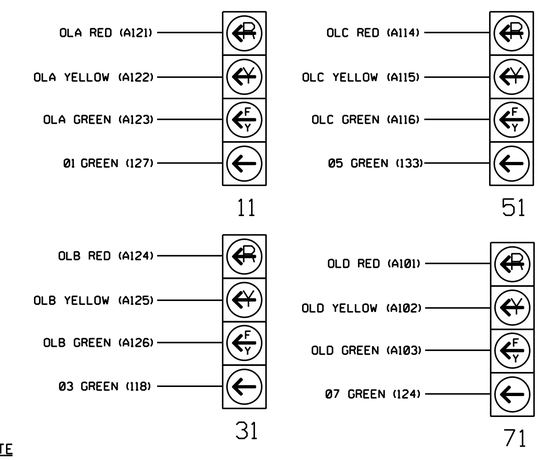

NOTE

The sequence display for signal heads 11, 31, 51, and 71 requires special logic programming. See sheet 2 for programming instructions.

INPUT FILE POSITION LAYOUT

(front view)

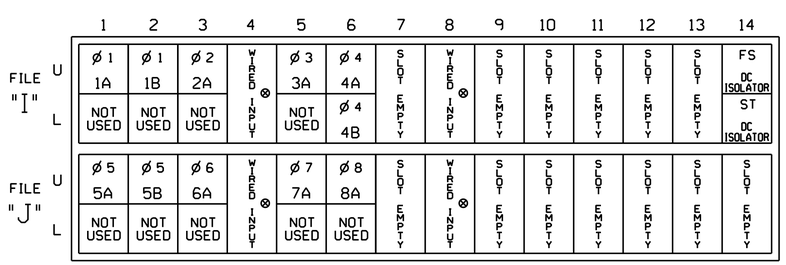

EX.: 1A, 2A, ETC. = LOOP NO.'S

⊗ Wired Input - Do not populate slot with detector card

FS = FLASH SENSE
ST = STOP TIME

INPUT FILE CONNECTION & PROGRAMMING CHART

LOOP NO.	LOOP TERMINAL	INPUT FILE POS.	PIN NO.	INPUT ASSIGNMENT NO.	DETECTOR NO.	NEMA PHASE	CALL	EXTEND	FULL TIME DELAY	STRETCH TIME	DELAY TIME
1A[1]	TB2-1,2	I1U	56	18	1	1	Y	Y			15
	-	J4U	48	10★	26	6	Y	Y	Y		3
	-	I1U	56	18★	51	1	Y	Y			3
1B	TB2-5,6	I2U	39	1	2	1	Y	Y			15
2A	TB2-9,10	I3U	63	25	32	2	Y	Y			
3A[2]	TB4-5,6	I5U	58	20	3	3	Y	Y			15
	-	J8U	50	12★	28	8	Y	Y			3
	-	I5U	58	20★	53	3	Y	Y			3
4A	TB4-9,10	I6U	41	3	4	4		Y			
4B	TB4-11,12	I6L	45	7	14	4	Y	Y	Y	2	5
5A[3]	TB3-1,2	J1U	55	17	5	5	Y	Y			15
	-	I4U	47	9★	22	2	Y	Y	Y		3
	-	J1U	55	17★	55	5	Y	Y			3
5B	TB3-5,6	J2U	40	2	6	5	Y	Y			15
6A	TB3-9,10	J3U	64	26	36	6	Y	Y			
7A[4]	TB5-5,6	J5U	57	19	7	7	Y	Y			15
	-	I8U	49	11★	24	4	Y	Y			3
	-	J5U	57	19★	57	7	Y	Y			3
8A	TB5-9,10	J6U	42	4	8	8	Y	Y			

[1] Add jumper from I1-W to J4-W, on rear of input file.
[2] Add jumper from I5-W to J8-W, on rear of input file.
[3] Add jumper from J1-W to I4-W, on rear of input file.
[4] Add jumper from J5-W to I8-W, on rear of input file.
★ See Input Page Assignment programming details on sheets 3 and 4.

INPUT FILE POSITION LEGEND: J2L
FILE J
SLOT 2
LOWER

LOAD RESISTOR INSTALLATION DETAIL

(install resistor as shown)

ACCEPTABLE VALUES	
VALUE (ohms)	WATTAGE
1.5K - 1.9K	25W (min)
2.0K - 3.0K	10W (min)

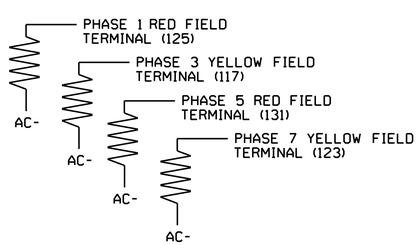

THIS ELECTRICAL DETAIL IS FOR
THE SIGNAL DESIGN: 03-1029
DESIGNED: October 2018
SEALED: 6/30/2021
REVISED: N/A

Electrical Detail - Sheet 1 of 7
Signal Upgrade

DOCUMENT NOT CONSIDERED FINAL UNLESS ALL SIGNATURES COMPLETED

ELECTRICAL AND PROGRAMMING DETAILS FOR:

SR 1308 (Gum Branch Road) at SR 1316 (Rhodestown Road)/ SR 2710 (Stateside Boulevard)

Division 03 Onslow Co. Jacksonville

PLAN DATE: October 2018 REVIEWED BY: A.D. Klinksiek
PREPARED BY: A.H. Thornburg REVIEWED BY: N.R. Simmons

REVISIONS | INIT. | DATE

Prepared for: Transportation Mobility and Safety Division of Traffic Engineering & Signals Management Section, STATE OF NORTH CAROLINA DEPARTMENT OF TRANSPORTATION
750 N.Greenfield Pkwy,Garner,NC 27529

SEAL: NORTH CAROLINA PROFESSIONAL SEAL 031464 ENGINEER NATASHA R. SIMMONS

DocuSigned by: Natasha R. Simmons
F6DA88DE3A04A5A...
SIGNATURE 6/30/2021 DATE

SIG. INVENTORY NO. 03-1029

HNTB
HNTB NORTH CAROLINA, P.C.
343 E. Six Forks Road, Suite 200
Raleigh, North Carolina 27609
NC License No: C-1554
(919) 546-8997