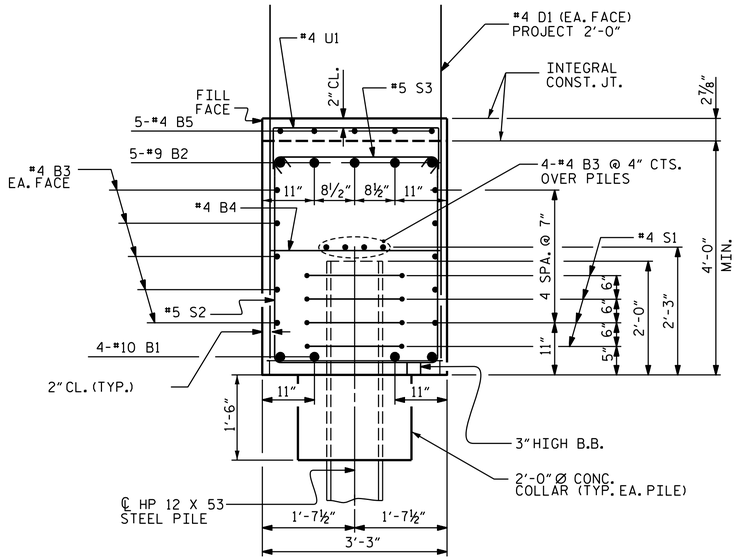

SECTION A-A

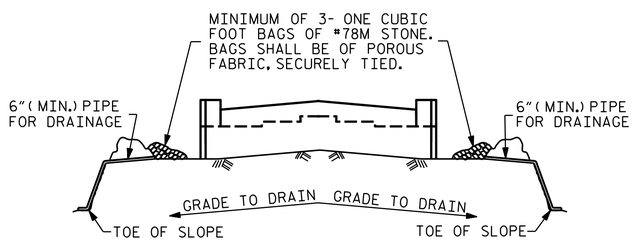

BAGGED STONE AND PIPE SHALL BE PLACED IMMEDIATELY AFTER COMPLETION OF END BENT EXCAVATION. PIPE MAY BE EITHER CONCRETE, CORRUGATED STEEL, CORRUGATED ALUMINUM ALLOY, OR CORRUGATED PLASTIC. PERFORATED PIPE WILL NOT BE ALLOWED.

BAGGED STONE SHALL REMAIN IN PLACE UNTIL THE ENGINEER DIRECTS THAT IT BE REMOVED. THE CONTRACTOR SHALL REMOVE AND DISPOSE OF SILT ACCUMULATIONS AT BAGGED STONE WHEN SO DIRECTED BY THE ENGINEER. BAGS SHALL BE REMOVED AND REPLACED WHENEVER THE ENGINEER DETERMINES THAT THEY HAVE DETERIORATED AND LOST THEIR EFFECTIVENESS.

NO SEPARATE PAYMENT WILL BE MADE FOR THIS WORK AND THE ENTIRE COST OF THIS WORK SHALL BE INCLUDED IN THE UNIT CONTRACT PRICE BID FOR THE SEVERAL PAY ITEMS.

TEMPORARY DRAINAGE AT END BENT

BAR TYPES

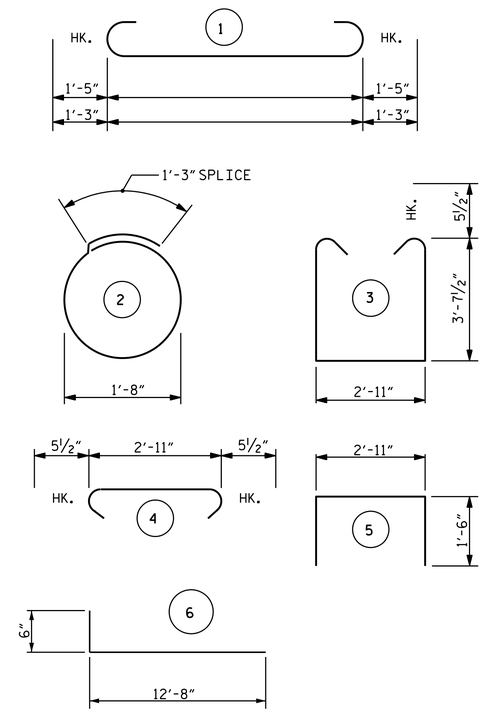

ALL BAR DIMENSIONS ARE OUT TO OUT.

BILL OF MATERIAL
END BENT 2

BAR	NO.	SIZE	TYPE	LENGTH	WEIGHT
B1	4	10	1	43'-9"	753
B2	5	9	1	43'-5"	738
B3	28	4	STR.	21'-8"	405
B4	11	4	STR.	2'-11"	21
B5	5	4	STR.	11'8"	39
D1	56	4	STR.	5'-10"	218
H1	76	5	6	13'-2"	1044
K1	24	4	STR.	2'-8"	43
S1	20	4	2	6'-6"	87
S2	38	5	3	11'-1"	439
S3	38	5	4	3'-10"	152
U1	9	4	5	5'-11"	36
V1	64	4	STR.	9'-6"	406

REINFORCING STEEL, LB		4381
CLASS A CONCRETE, CY	POUR 1	24.6
	POUR 2	6.5
	TOTAL	31.1
HP 12X53 STEEL PILES	NO.	5
	LF	275
PILE DRIVING EQUIPMENT SETUP FOR HP 12X53 STEEL PILES, EA.		5
PILE REDRIVES, EA.		3

PROJECT NO. B-5703

CUMBERLAND/HARNETT COUNTY

STATION: 16+92.70 -L-

SHEET 3 OF 3

STATE OF NORTH CAROLINA
DEPARTMENT OF TRANSPORTATION
RALEIGH

SUBSTRUCTURE END BENT 2

DocuSigned by: DB3C8E45B6D499

NORTH CAROLINA PROFESSIONAL SEAL 14114 ENGINEER ROBERT C. LARSON

7/1/2021

REVISIONS							SHEET NO.
NO.	BY:	DATE:	NO.	BY:	DATE:		S-25
1			3				TOTAL SHEETS
2			4				29

ENGINEERS • PLANNERS • SCIENTISTS • CONSTRUCTION MANAGERS LICENSE NUMBER: C-0764
KCI Associates of North Carolina, P.A.
4505 Falls of Neuse Road, Suite 400 Raleigh, NC 27609-6270 Phone (919) 783-9214

DOCUMENT NOT CONSIDERED FINAL UNLESS ALL SIGNATURES COMPLETED

DESIGN ENGINEER OF RECORD:	DocuSign	DATE :	7/1/2021
DRAWN BY : A. K. ALLANKI		DATE :	10/02/20
CHECKED BY : R. C. LARSON		DATE :	10/07/20

KCI JOB NO: 251801945.13