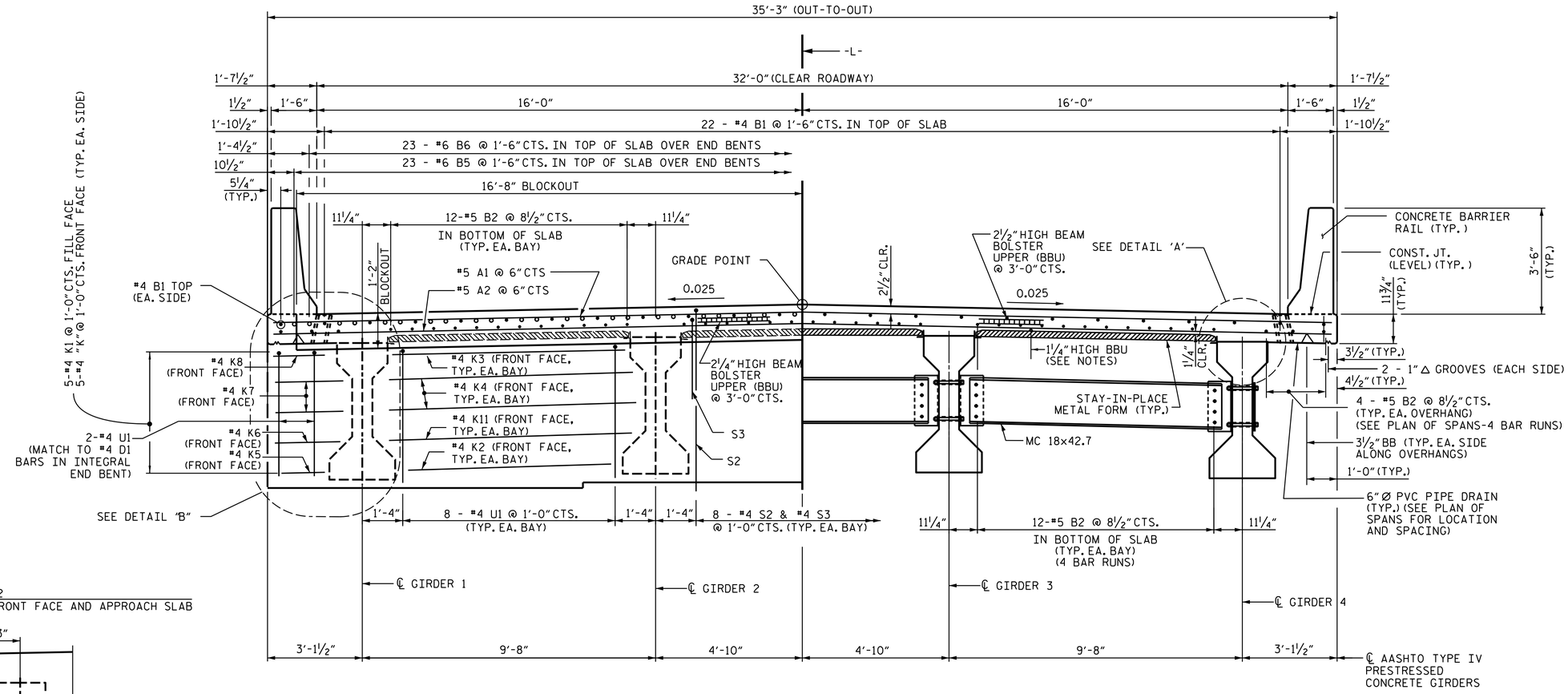

TYPICAL HALF SECTION INTEGRAL END BENT

TYPICAL HALF SECTION AT MIDSPAN

● INDICATES CONTINUOUS REINFORCING
○ INDICATES ADDITIONAL REINFORCING OVER END BENT

TYPICAL SECTION

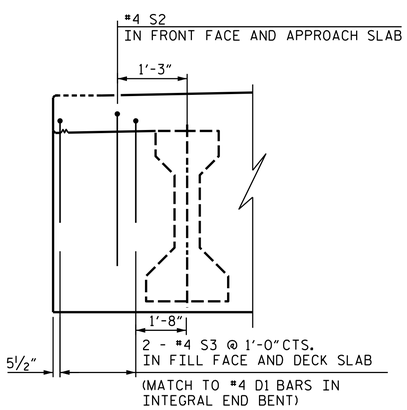

DETAIL B

(TYP. EA. SIDE @ END BENTS)

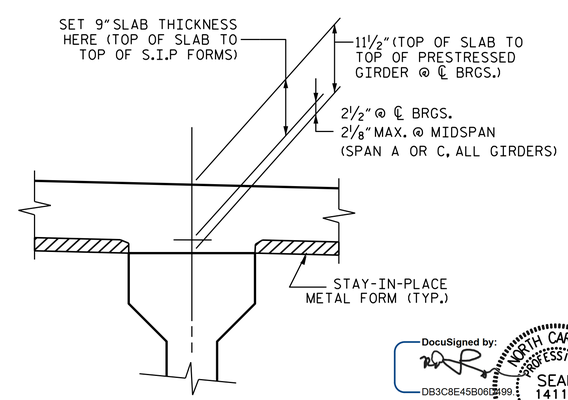

DETAIL A

NOTES

PROVIDE 1¼" HIGH BEAM BOLSTERS UPPER AT 4'-0" CTS. ATOP THE METAL STAY-IN-PLACE FORMS TO SUPPORT THE BOTTOM MAT OF 'A' BARS. WHEN USING REMOVABLE FORMS, PROVIDE CONTINUOUS HIGH CHAIRS FOR METAL DECK (CHCM) @ 4'-0" CTS. WITH A HEIGHT TO SUPPORT THE BOTTOM MAT OF 'A' BARS A CLEAR DISTANCE OF 2½" ABOVE THE TOP OF THE REMOVABLE FORM.

LONGITUDINAL STEEL MAY BE SHIFTED SLIGHTLY, AS NECESSARY, TO AVOID INTERFERENCE WITH STIRRUPS IN PRESTRESSED CONCRETE GIRDERS.

PREVIOUSLY CAST CONCRETE SHALL HAVE ATTAINED A MINIMUM COMPRESSIVE STRENGTH OF 3,000 PSI BEFORE ADDITIONAL CONCRETE IS CAST IN THE CONTINUOUS UNIT.

CONCRETE BARRIER RAIL IN A CONTINUOUS UNIT SHALL NOT BE CAST UNTIL ALL SLAB CONCRETE IN THAT UNIT HAS BEEN CAST AND REACHED A MINIMUM COMPRESSIVE STRENGTH OF 3,000 PSI

SEE CONC. BARRIER RAIL DRAWINGS FOR ADDITIONAL REINFORCING STEEL EMBEDDED IN DECK.

PROJECT NO. B-5703
CUMBERLAND/HARNETT COUNTY
STATION: 16+92.70 -L-

SHEET 1 OF 3

STATE OF NORTH CAROLINA
DEPARTMENT OF TRANSPORTATION
RALEIGH

SUPERSTRUCTURE TYPICAL SECTION

DocuSigned by: DB3C8E45B06D499...
7/1/2021

NORTH CAROLINA PROFESSIONAL SEAL 14114 ENGINEER ROBERT C. LARSON

DESIGN ENGINEER OF RECORD:	DATE : 7/1/2021
DRAWN BY : R.J. FLORY	DATE : 03/19/19
CHECKED BY : R. C. LARSON	DATE : 03/20/19

DOCUMENT NOT CONSIDERED FINAL UNLESS ALL SIGNATURES COMPLETED

ENGINEERS • PLANNERS • SCIENTISTS • CONSTRUCTION MANAGERS LICENSE NUMBER: C-0782
KCI Associates of North Carolina, P.A.
4505 Falls of Neuse Road, Suite 400 Raleigh, NC 27609-6270 Phone (919) 783-9211

REVISIONS									SHEET NO.
NO.	BY:	DATE:	NO.	BY:	DATE:				S-5
1			3						TOTAL SHEETS
2			4						29

KCI JOB NO: 251801945.13