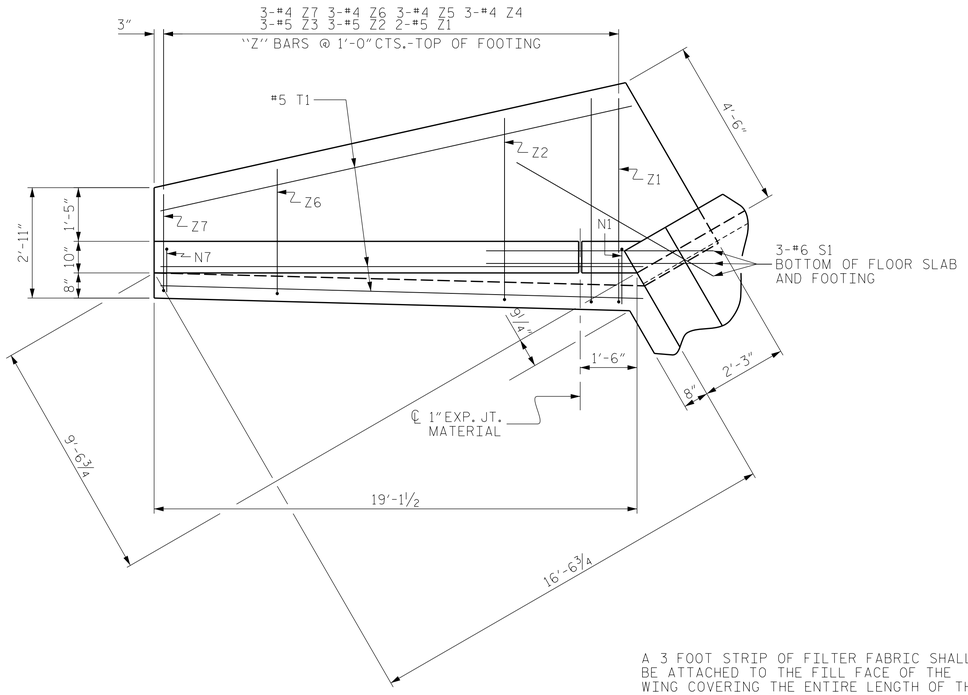

A 3 FOOT STRIP OF FILTER FABRIC SHALL BE ATTACHED TO THE FILL FACE OF THE WING COVERING THE ENTIRE LENGTH OF THE EXPANSION JOINT.

PLAN

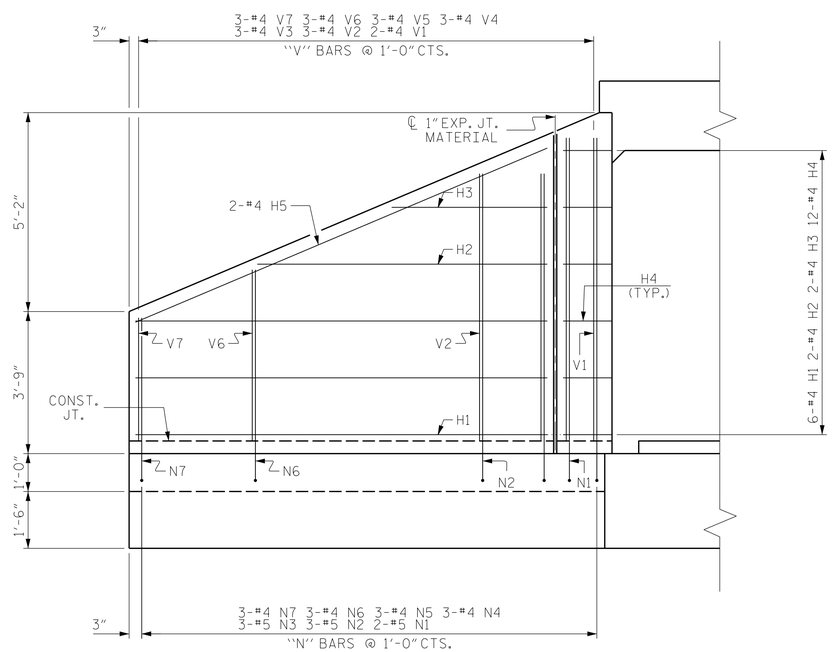

ELEVATION

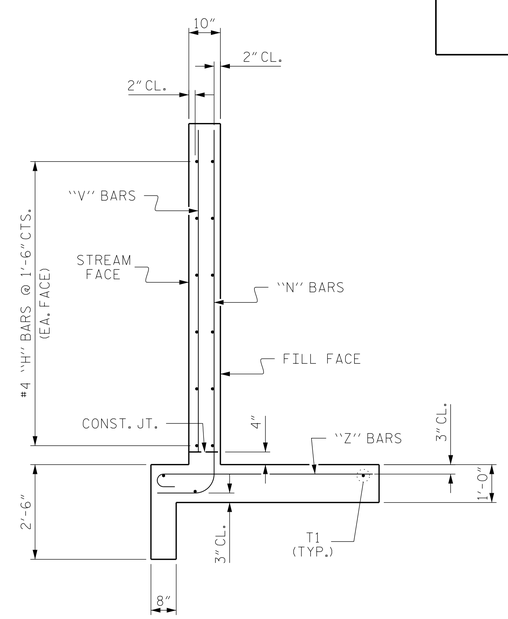

TYPICAL WING SECTION

BAR TYPES

ALL BAR DIMENSIONS ARE OUT TO OUT.

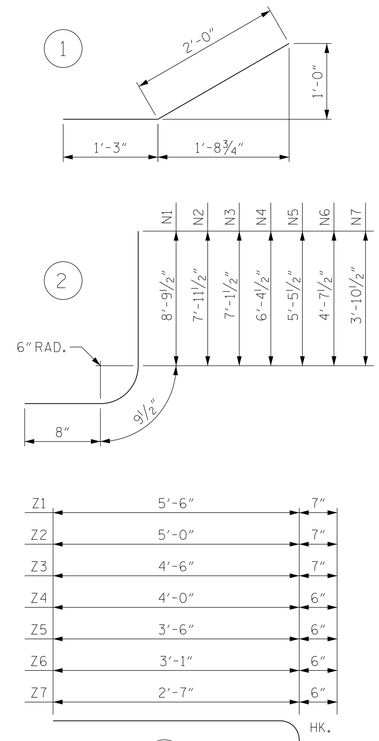

BILL OF MATERIAL

BAR	NO.	SIZE	TYPE	LENGTH	WEIGHT
H1	24	#4	STR	17'-3"	277
H2	8	#4	STR	11'-11"	64
H3	8	#4	STR	6'-5"	34
H4	48	#4	1	3'-3"	104
H5	8	#4	STR	19'-5"	104
N1	8	#5	2	10'-3"	86
N2	12	#5	2	9'-5"	118
N3	12	#5	2	8'-7"	107
N4	12	#4	2	7'-10"	63
N5	12	#4	2	6'-11"	55
N6	12	#4	2	6'-1"	49
N7	12	#4	2	5'-4"	43
S1	12	#6	STR	6'-0"	108
T1	12	#5	STR	19'-0"	238
V1	8	#4	STR	8'-3"	44
V2	12	#4	STR	7'-5"	59
V3	12	#4	STR	6'-7"	53
V4	12	#4	STR	5'-10"	47
V5	12	#4	STR	4'-11"	39
V6	12	#4	STR	4'-1"	33
V7	12	#4	STR	3'-4"	27
Z1	8	#5	3	6'-1"	51
Z2	12	#5	3	5'-7"	70
Z3	12	#5	3	5'-1"	64
Z4	12	#4	3	4'-6"	36
Z5	12	#4	3	4'-0"	32
Z6	12	#4	3	3'-7"	29
Z7	12	#4	3	3'-1"	25

REINFORCING STEEL
FOR 4 WINGS 2059 LBS

CLASS A CONCRETE
4 WINGS 30.8 CY
2 HEADWALLS 0.7 CY
2 END CURTAIN WALLS 0.6 CY
TOTAL 32.1 CY

PROJECT NO. R-5020B
COLUMBUS COUNTY
STATION: 172+34.91 -L-

SHEET 4 OF 4

STATE OF NORTH CAROLINA
DEPARTMENT OF TRANSPORTATION
RALEIGH

WINGS FOR CONCRETE BOX CULVERT

H = 8'-0" SLOPE = 3:1
90° SKEW

DESIGN ENGINEER OF RECORD: DATE :
DocuSigned by: 1/27/2020
DB3C8E45B06D499...
DRAWN BY : K. SU DATE : 10/07/18
CHECKED BY : R. C. LARSON DATE : 03/27/19

DocuSigned by:
DB3C8E45B06D499...
NORTH CAROLINA PROFESSIONAL SEAL 14114 ENGINEER ROBERT C. LARSON
1/27/2020

DOCUMENT NOT CONSIDERED FINAL UNLESS ALL SIGNATURES COMPLETED

ENGINEERS • PLANNERS • SCIENTISTS • CONSTRUCTION MANAGERS LICENSE NUMBER: C-0704
KCI Associates of North Carolina, P.A.
4505 Falls of Neuse Road, Suite 400 Raleigh, NC 27609-6270 Phone (919) 783-9211

REVISIONS						SHEET NO.
NO.	BY:	DATE:	NO.	BY:	DATE:	C-4
1			3			TOTAL SHEETS
2			4			4