09/08/99

TIP PROJECT: BR-0108

CONTRACT: C204628

STATE OF NORTH CAROLINA
DIVISION OF HIGHWAYS

WILKES COUNTY

STATE	STATE PROJECT REFERENCE NO.	SHEET NO.	TOTAL SHEETS
N.C.	BR-0108		

STATE PROJ. NO.	F.A. PROJ. NO.	DESCRIPTION
49216.1.1		PE
49216.2.1		R/W, UTIL.
49216.3.1		CONST.

LOCATION: REPLACE BRIDGE NO. 4 ON SR 2418 (SOUTH WINDY GAP ROAD) OVER LITTLE HUNTING CREEK

TYPE OF WORK: GRADING, DRAINAGE, PAVING, AND STRUCTURE

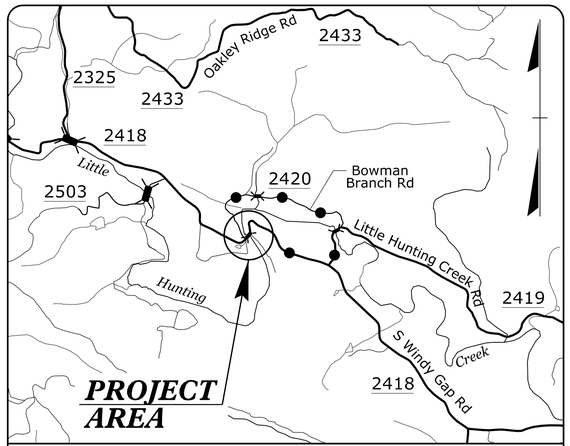

VICINITY MAP
DETOUR ROUTE ***NOT TO SCALE***

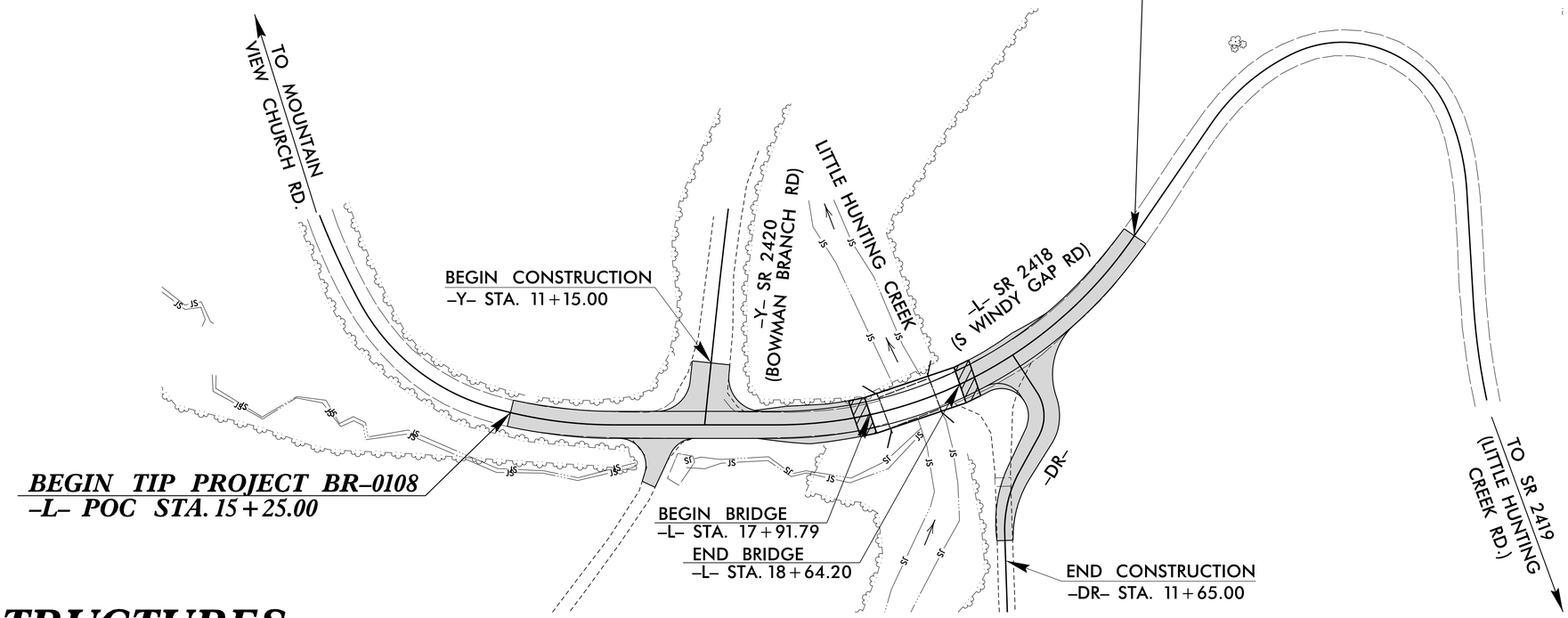

STRUCTURES

DESIGN EXCEPTION FOR DESIGN SPEED OF 30 MPH AND STOPPING SIGHT DISTANCE OF 20 MPH.

DOCUMENT NOT CONSIDERED FINAL UNLESS ALL SIGNATURES COMPLETED

GRAPHIC SCALES

50 25 0 50 100
PLANS

50 25 0 50 100
PROFILE (HORIZONTAL)

10 5 0 10 20
PROFILE (VERTICAL)

DESIGN DATA

ADT 2020 = 120
ADT 2045 = 240
V = 30 MPH
FUNC CLASS =
RURAL LOCAL
SUB REGIONAL TIER

PROJECT LENGTH

LENGTH ROADWAY PROJECT BR-0108	=	0.083 MILES
LENGTH STRUCTURE PROJECT BR-0108	=	0.014 MILES
TOTAL LENGTH PROJECT BR-0108	=	0.097 MILES

Plans Prepared By:
ms consultants, inc.
5444 Wade Park Blvd.
Suite 160
Raleigh, NC 27607
NC License Number : C-3239

Plans Prepared For:
NORTH CAROLINA
DEPARTMENT OF TRANSPORTATION
DIVISION OF HIGHWAYS
1000 BIRCH RIDGE DRIVE
RALEIGH, NC 27610

2018 STANDARD SPECIFICATIONS

LETTING DATE:
JULY 20, 2021

17-MAY-2021 16:38
N:\DO\60\08339-04 BR-0108 NCDOT WILKES 4 OVER LITTLE HUNTING CREEK\Structures\03_Drawings\Sheets\401_001_BR0108_SMU_TSH_000.dgn
$$$$USERNAME$$$$

DocuSign Envelope ID: 292C79D9-224C-4D38-B301-3E8F8C081A38

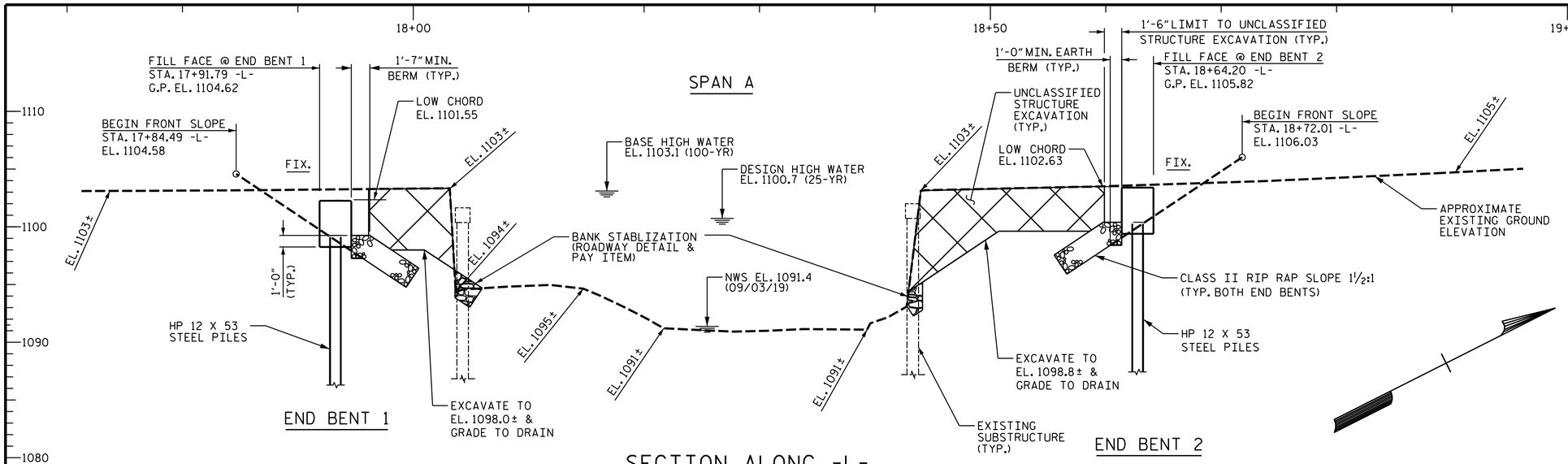

SECTION ALONG -L-

-6.5366% △ 4.5443%

P. I. STA. = 17+30.00 -L-
EL. = 1099.04
V. C. = 410'

GRADE DATA

I HEREBY CERTIFY THESE PLANS
ARE THE AS-BUILT PLANS

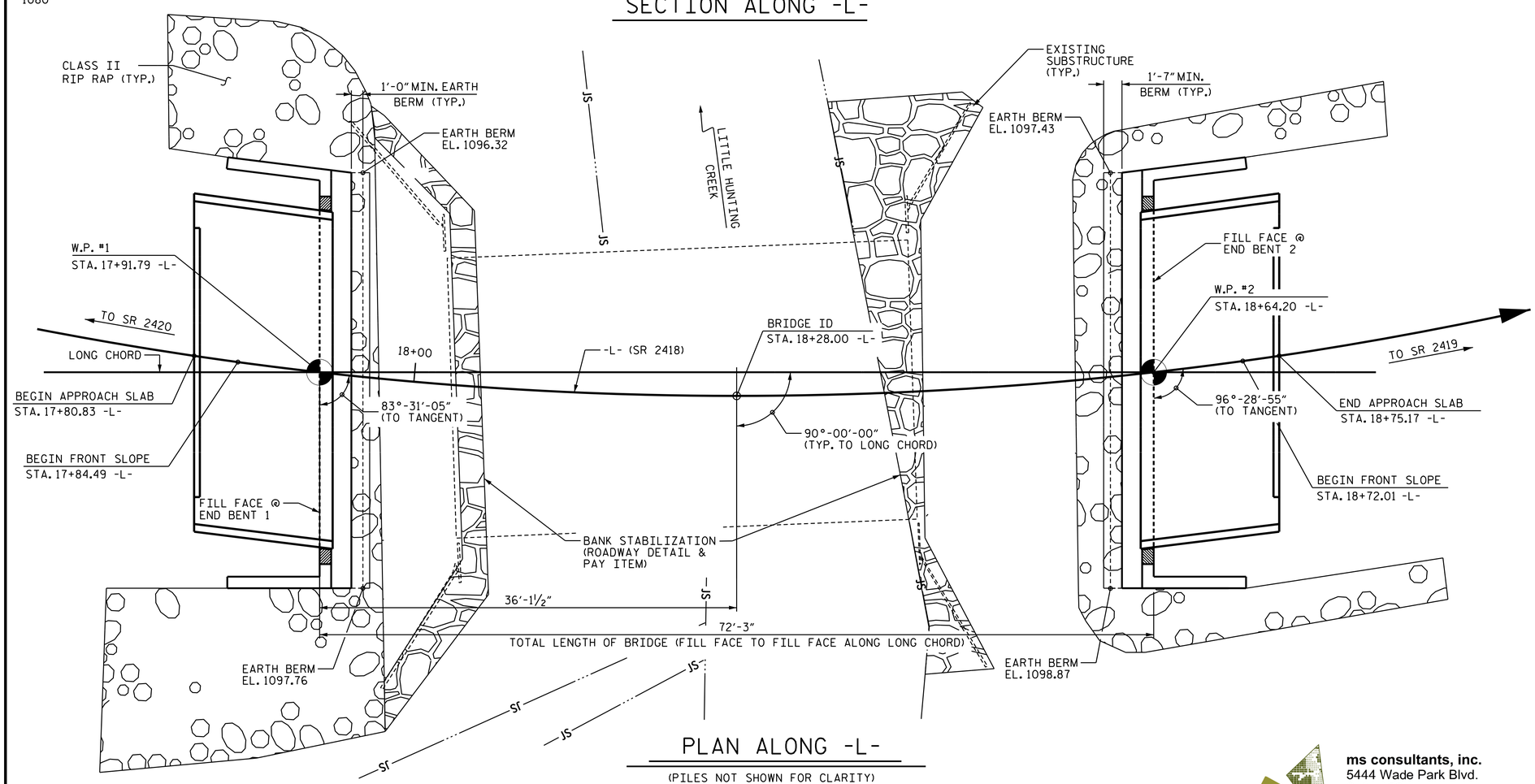

PLAN ALONG -L-

(PILES NOT SHOWN FOR CLARITY)

HORIZONTAL CURVE DATA

P.I. STA. = 18+91.89 -L-
Δ = 55°-32'-56.4" (LT)
D = 17°-54'-17.8"
L = 310.24'
T = 168.53'
R = 320.00'

PROJECT NO. BR-0108
WILKES COUNTY
STATION: 18+28.00 -L-

SHEET 1 of 3 REPLACES BRIDGE NO. 04

STATE OF NORTH CAROLINA
DEPARTMENT OF TRANSPORTATION
RALEIGH

GENERAL DRAWING
BRIDGE 4 ON SR 2418
OVER LITTLE HUNTING CREEK
BETWEEN SR 2420 AND SR 2419

REVISIONS							SHEET NO.
NO.	BY:	DATE:	NO.	BY:	DATE:		S-1
1			3				TOTAL SHEETS
2			4				14

DOCUMENT NOT CONSIDERED FINAL UNLESS ALL SIGNATURES COMPLETED

NORTH CAROLINA PROFESSIONAL SEAL 037903 ENGINEER JEFFREY M. KEPICH

DocuSigned by: Jeffrey Kepich 5/18/2021

ms consultants, inc.
5444 Wade Park Blvd.
Suite 160
Raleigh, NC 27607
NC License Number : C-3239

DRAWN BY : J.M. KEPICH DATE : 11/2020
CHECKED BY : L.M. SAMPLES DATE : 04/2021
DESIGN ENGINEER OF RECORD : J.M. KEPICH DATE : 05/2021

$$$$$$SYSTIME$$$$$
$$$$$$$$$$$$$$$$$$DGN$$$$$$$$$$$$$$$$$$
$$$$USERNAME$$$$

DocuSign Envelope ID: 292C79D9-224C-4D38-B301-3E8F8C081A38

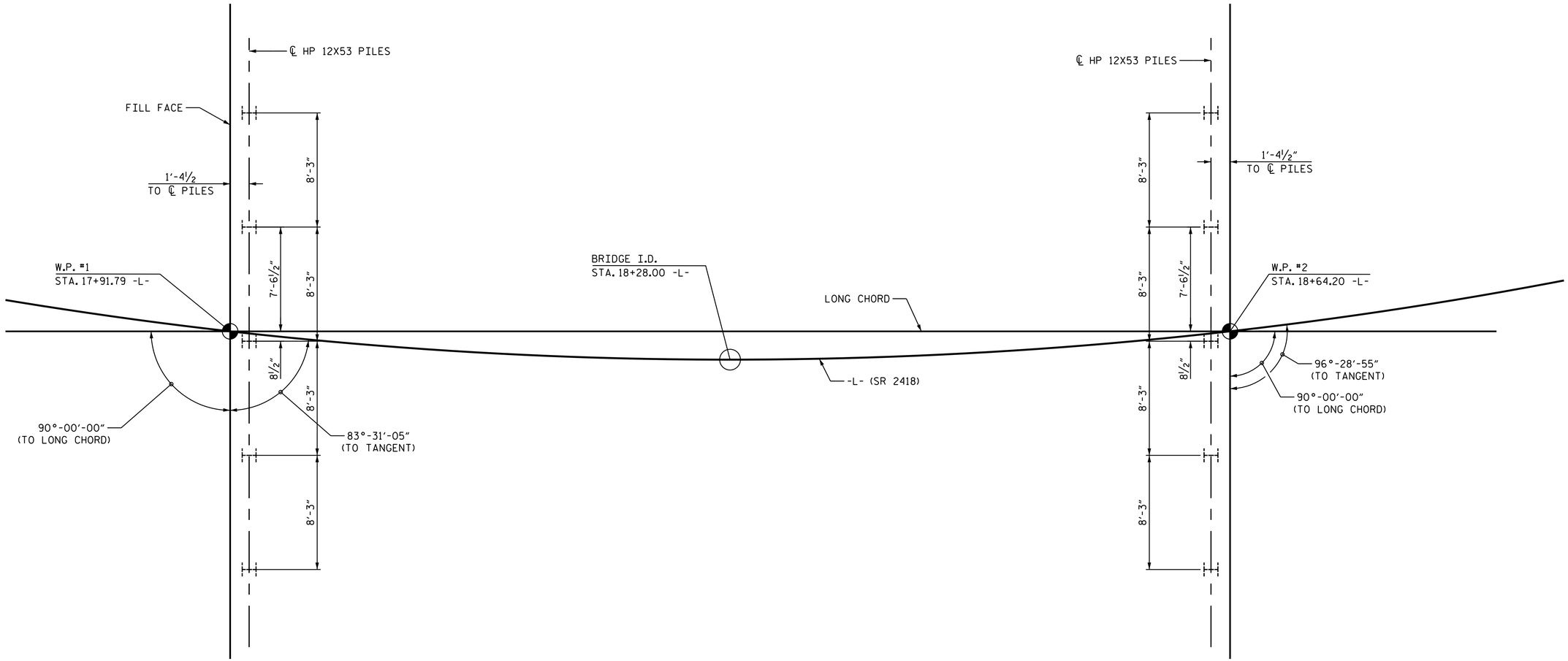

FOUNDATION LAYOUT

DIMENSIONS LOCATING PILES ARE SHOWN TO THE CENTERLINE

NOTES

FOR PILES, SEE SECTION 450 OF THE STANDARD SPECIFICATIONS.
PILES AT END BENT NO. 1 ARE DESIGNED FOR A FACTORED RESISTANCE OF 99 TONS PER PILE.
DRIVE PILES AT END BENT NO. 1 TO A REQUIRED DRIVING RESISTANCE OF 165 TONS PER PILE.
STEEL H-PILE POINTS ARE REQUIRED FOR STEEL H-PILES AT END BENT NO. 1. FOR STEEL PILE POINTS, SEE SECTION 450 OF THE STANDARD SPECIFICATIONS.
PILES AT END BENT NO. 2 ARE DESIGNED FOR A FACTORED RESISTANCE OF 99 TONS PER PILE.
DRIVE PILES AT END BENT NO. 2 TO A REQUIRED DRIVING RESISTANCE OF 165 TONS PER PILE.
STEEL H-PILE POINTS ARE REQUIRED FOR STEEL H-PILES AT END BENT NO. 2. FOR STEEL PILE POINTS, SEE SECTION 450 OF THE STANDARD SPECIFICATIONS.

PROJECT NO. BR-0108
WILKES COUNTY
STATION: 18+28.00 -L-

SHEET 2 OF 3

STATE OF NORTH CAROLINA
DEPARTMENT OF TRANSPORTATION
RALEIGH

FOUNDATION LAYOUT

BRIDGE 4 ON SR 2418
OVER LITTLE HUNTING CREEK
BETWEEN SR 2420 & SR 2419

REVISIONS						SHEET NO.
NO.	BY:	DATE:	NO.	BY:	DATE:	S-2
1			3			TOTAL SHEETS
2			4			14

DOCUMENT NOT CONSIDERED FINAL UNLESS ALL SIGNATURES COMPLETED

NORTH CAROLINA PROFESSIONAL SEAL 037903 ENGINEER JEFFREY M. KEPICH

DocuSigned by: Jeffrey Kepich 5/18/2021

ms consultants, inc.
5444 Wade Park Blvd.
Suite 160
Raleigh, NC 27607
NC License Number : C-3239

DRAWN BY :	J.M. KEPICH	DATE :	11/20
CHECKED BY :	L.M. SAMPLES	DATE :	04/21
DESIGN ENGINEER OF RECORD :	J.M. KEPICH	DATE :	05/21

$$$$$$$SYSTIME$$$$$
$$$$$$$$$$$$$$$$$$DGN$$$$$$$$$$$$$$$$$$
$$$$USERNAME$$$$

DocuSign Envelope ID: 292C79D9-224C-4D38-B301-3E8F8C081A38

TOTAL BILL OF MATERIAL

	REMOVAL OF EXISTING STRUCTURE	ASBESTOS ASSESSMENT	UNCLASSIFIED STRUCTURE EXCAVATION	CLASS A CONCRETE	BRIDGE APPROACH SLABS	REINFORCING STEEL	PILE DRIVING EQUIPMENT SETUP FOR HP12X53 STEEL PILES	HP12X53 STEEL PILES		STEEL PILE POINTS	VERTICAL CONCRETE BARRIER RAIL	RIP RAP CLASS II (2'-0" THICK)	GEOTEXTILE FOR DRAINAGE	ELASTOMERIC BEARINGS	3'-0" X 2'-0" PRESTRESSED CONCRETE CORED SLABS		FIBER OPTIC CONDUIT SYSTEM
	LUMP SUM	LUMP SUM	LUMP SUM	CU. YDS.	LUMP SUM	LBS.	EA.	NO.	LIN. FT.	EA.	LIN. FT.	TONS	SQ. YDS.	LUMP SUM	NO.	LIN. FT.	LIN. FT.
SUPERSTRUCTURE											140.25			LUMP SUM	10	700	136
END BENT NO. 1				20.5		2474	5	5	75	5		80	90				
END BENT NO. 2				20.5		2474	5	5	75	5		67	72				
TOTAL	LUMP SUM	LUMP SUM	LUMP SUM	41	LUMP SUM	4948	10	10	150	10	140.25	147	162	LUMP SUM	10	700	136

BM. #2 - BENCH TIE SET IN 30" ASH TREE, 149.00' LT. OF -L- STA. 19+01.00 EL. 1099.28

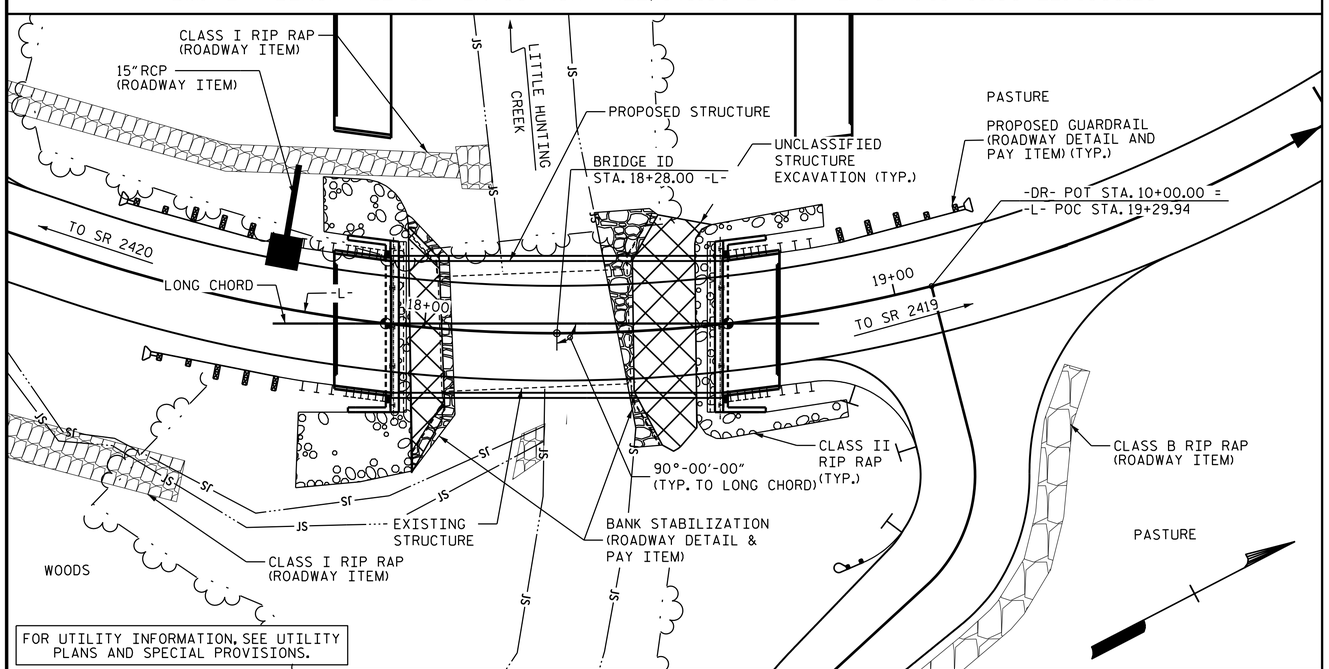

LOCATION SKETCH

NOTES:

ASSUMED LIVE LOAD = HL-93 OR ALTERNATE LOADING.

THIS BRIDGE HAS BEEN DESIGNED IN ACCORDANCE WITH THE AASHTO LRFD BRIDGE DESIGN SPECIFICATIONS.

THIS BRIDGE IS LOCATED IN SEISMIC ZONE 1.

FOR OTHER DESIGN DATA AND GENERAL NOTES, SEE SHEET SN.

FOR SUBMITTAL OF WORKING DRAWINGS, SEE SPECIAL PROVISIONS.

FOR FALSEWORK AND FORMWORK, SEE SPECIAL PROVISIONS.

FOR CRANE SAFETY, SEE SPECIAL PROVISIONS.

FOR GROUT FOR STRUCTURES, SEE SPECIAL PROVISIONS.

INASMUCH AS THE PAINT SYSTEM ON THE EXISTING STRUCTURAL STEEL CONTAINS LEAD, THE CONTRACTOR'S ATTENTION IS DIRECTED TO ARTICLE 107-1 OF THE STANDARD SPECIFICATIONS. ANY COSTS RESULTING FROM COMPLIANCE WITH APPLICABLE STATE OR FEDERAL REGULATIONS PERTAINING TO HANDLING OF MATERIALS CONTAINING LEAD BASED PAINT SHALL BE INCLUDED IN THE BID PRICE FOR "REMOVAL OF EXISTING STRUCTURE AT STATION 18+28.00 -L-."

THE MATERIAL SHOWN IN THE CROSS-HATCHED AREA SHALL BE EXCAVATED FOR A DISTANCE OF 21 FT LEFT AND 32 FT RIGHT OF CENTERLINE ROADWAY AT END BENT NO.1 AND A DISTANCE OF 23 FT LEFT AND 27 FT RIGHT OF CENTERLINE ROADWAY AT END BENT NO.2 AS DIRECTED BY THE ENGINEER. THIS WORK WILL BE PAID FOR AT THE CONTRACT LUMP SUM PRICE FOR UNCLASSIFIED STRUCTURE EXCAVATION. SEE SECTION 412 OF THE STANDARD SPECIFICATIONS.

FOR FIBER OPTIC CONDUIT SYSTEM, SEE SPECIAL PROVISIONS.

THE EXISTING STRUCTURE CONSISTING OF A SINGLE 40'-6" SPAN WITH A CLEAR ROADWAY WIDTH OF 24.4167' AND TIMBER DECK SUPPORTED BY STEEL GIRDERS ON TIMBER CAPS AND PILES LOCATED AT THE PROPOSED STRUCTURE SITE SHALL BE REMOVED. THE EXISTING BRIDGE IS PRESENTLY POSTED FOR LOAD LIMIT. SHOULD THE STRUCTURAL INTEGRITY OF THE BRIDGE DETERIORATE DURING CONSTRUCTION OF THE PROPOSED BRIDGE, A LOAD LIMIT MAY BE POSTED AND MAY BE REDUCED AS FOUND NECESSARY DURING THE LIFE OF THE PROJECT.

THE SUBSTRUCTURE OF THE EXISTING BRIDGE INDICATED ON THE PLANS IS FROM THE BEST INFORMATION AVAILABLE. SINCE THIS INFORMATION IS SHOWN FOR THE CONVENIENCE OF THE CONTRACTOR, THE CONTRACTOR SHALL HAVE NO CLAIM WHATSOEVER AGAINST THE DEPARTMENT OF TRANSPORTATION FOR ANY DELAYS OR ADDITIONAL COST INCURRED BASED ON DIFFERENCES BETWEEN THE EXISTING BRIDGE SUBSTRUCTURE SHOWN ON THE PLANS AND THE ACTUAL CONDITIONS AT THE PROJECT SITE.

REMOVAL OF THE EXISTING BRIDGE SHALL BE PERFORMED SO AS NOT TO ALLOW DEBRIS TO FALL INTO THE WATER. THE CONTRACTOR SHALL REMOVE THE BRIDGE AND SUBMIT PLANS FOR DEMOLITION IN ACCORDANCE WITH ARTICLE 402-2 OF THE STANDARD SPECIFICATIONS.

THIS STRUCTURE HAS BEEN DESIGNED IN ACCORDANCE WITH "HEC 18-EVALUATING SCOUR AT BRIDGES."

FOR EROSION CONTROL MEASURES, SEE EROSION CONTROL PLANS.

ASPHALT WEARING SURFACE IS INCLUDED IN ROADWAY QUANTITY ON ROADWAY PLANS.

FOR ASBESTOS ASSESSMENT FOR BRIDGE DEMOLITION AND RENOVATION ACTIVITIES, SEE SPECIAL PROVISIONS.

HYDRAULIC DATA

DESIGN DISCHARGE	= 1,800 C.F.S
FREQUENCY OF DESIGN DISCHARGE	= 25 YRS.
DESIGN HIGH WATER ELEVATION	= 1107.7
DRAINAGE AREA	= 8.2 SQ. MI.
BASE DISCHARGE (Q100)	= 2,833 C.F.S.
BASE HIGH WATER ELEVATION	= 1103.9

OVERTOPPING FLOOD DATA

OVERTOPPING DISCHARGE	= 4,620 C.F.S.
FREQUENCY OF OVERTOPPING FLOOD	= 500(+) YRS.
OVERTOPPING FLOOD ELEVATION	= 1105.1

PROJECT NO. BR-0108
WILKES COUNTY
STATION: 18+28.00 -L-

SHEET 3 of 3

STATE OF NORTH CAROLINA
DEPARTMENT OF TRANSPORTATION
RALEIGH

GENERAL DRAWING

BRIDGE 4 ON SR 2418
OVER LITTLE HUNTING CREEK
BETWEEN SR 2420 AND SR 2419

ms consultants, inc.
5444 Wade Park Blvd.
Suite 160
Raleigh, NC 27607
NC License Number : C-3239

NORTH CAROLINA PROFESSIONAL SEAL 037903 ENGINEER JEFFREY M. KEPICH

DocuSigned by: Jeffrey Kepich 5/18/2021

DOCUMENT NOT CONSIDERED FINAL UNLESS ALL SIGNATURES COMPLETED

REVISIONS						SHEET NO.
NO.	BY:	DATE:	NO.	BY:	DATE:	S-3
1			3			TOTAL SHEETS
2			4			14

DRAWN BY :	J.M. KEPICH	DATE :	11/20
CHECKED BY :	L.M. SAMPLES	DATE :	04/21
DESIGN ENGINEER OF RECORD :	J.M. KEPICH	DATE :	05/21

$$$$$$$SYSTIME$$$$$
$$$$$$$$$$$$$$$$$DGN$$$$$$$$$$$$$$$$$$$$
$$$$USERNAME$$$$

DocuSign Envelope ID: 292C79D9-224C-4D38-B301-3E8F8C081A38

LOAD AND RESISTANCE FACTOR RATING (LRFD) SUMMARY FOR PRESTRESSED CONCRETE GIRDERS

LEVEL		VEHICLE	WEIGHT (W) (TONS)	CONTROLLING LOAD RATING	MINIMUM RATING FACTORS (RF)	TONS = W X RF	STRENGTH I LIMIT STATE											SERVICE III LIMIT STATE						COMMENT NUMBER
							LIVELOAD FACTORS	MOMENT					SHEAR					LIVELOAD FACTORS	MOMENT					
								DISTRIBUTION FACTORS (DF)	RATING FACTOR	SPAN	GIRDER LOCATION	DISTANCE FROM LEFT END OF SPAN (ft)	DISTRIBUTION FACTORS (DF)	RATING FACTOR	SPAN	GIRDER LOCATION	DISTANCE FROM LEFT END OF SPAN (ft)		DISTRIBUTION FACTORS (DF)	RATING FACTOR	SPAN	GIRDER LOCATION	DISTANCE FROM LEFT END OF SPAN (ft)	
DESIGN LOAD RATING		HL-93(Inv)	N/A	**1**	1.05	--	1.75	0.240	**1.05**	70'	EL	**34.5**	0.509	1.35	70'	EL	6.5	0.80	0.240	1.69	70'	EL	34.5	
		HL-93(Opr)	N/A	--	1.37	--	1.35	0.240	1.37	70'	EL	34.5	0.509	1.79	70'	EL	6.5	N/A	--	--	--	--	--	
		HS-20(Inv)	36.000	**2**	1.37	49.32	1.75	0.240	**1.37**	70'	EL	**34.5**	0.509	1.71	70'	EL	6.5	0.80	0.240	2.19	70'	EL	34.5	
		HS-20(Opr)	36.000	--	1.77	63.72	1.35	0.240	1.77	70'	EL	34.5	0.509	2.27	70'	EL	6.5	N/A	--	--	--	--	--	
LEGAL LOAD RATING	SV	SNSH	13.500	--	3.82	51.57	1.4	0.240	3.82	70'	EL	34.5	0.509	5.44	70'	EL	6.5	0.80	0.240	3.91	70'	EL	34.5	
		SNGARBS2	20.000	--	2.86	57.28	1.4	0.240	2.86	70'	EL	34.5	0.509	3.82	70'	EL	6.5	0.80	0.240	2.93	70'	EL	34.5	
		SNAGRIS2	22.000	--	2.72	59.84	1.4	0.240	2.72	70'	EL	34.5	0.509	3.54	70'	EL	6.5	0.80	0.240	2.78	70'	EL	34.5	
		SNCOTTS3	27.250	--	1.90	51.81	1.4	0.240	1.90	70'	EL	34.5	0.509	2.63	70'	EL	6.5	0.80	0.240	1.94	70'	EL	34.5	
		SNAGGRS4	34.925	--	1.60	55.73	1.4	0.240	1.60	70'	EL	34.5	0.509	2.16	70'	EL	6.5	0.80	0.240	1.63	70'	EL	34.5	
		SNS5A	35.550	--	1.56	55.46	1.4	0.240	1.56	70'	EL	34.5	0.509	2.19	70'	EL	6.5	0.80	0.240	1.60	70'	EL	34.5	
		SNS6A	39.950	--	1.43	57.29	1.4	0.240	1.43	70'	EL	34.5	0.509	1.99	70'	EL	6.5	0.80	0.240	1.47	70'	EL	34.5	
		SNS7B	42.000	--	1.37	57.36	1.4	0.240	1.37	70'	EL	34.5	0.509	1.96	70'	EL	6.5	0.80	0.240	1.40	70'	EL	34.5	
	TTST	TNAGRIT3	33.000	--	1.75	57.74	1.4	0.240	1.75	70'	EL	34.5	0.509	2.40	70'	EL	6.5	0.80	0.240	1.79	70'	EL	34.5	
		TNT4A	33.075	--	1.76	58.15	1.4	0.240	1.76	70'	EL	34.5	0.509	2.33	70'	EL	6.5	0.80	0.240	1.80	70'	EL	34.5	
		TNT6A	41.600	--	1.44	59.91	1.4	0.240	1.44	70'	EL	34.5	0.509	2.09	70'	EL	6.5	0.80	0.240	1.47	70'	EL	34.5	
		TNT7A	42.000	--	1.45	60.85	1.4	0.240	1.45	70'	EL	34.5	0.509	2.04	70'	EL	6.5	0.80	0.240	1.48	70'	EL	34.5	
		TNT7B	42.000	--	1.50	63.10	1.4	0.240	1.50	70'	EL	34.5	0.509	1.90	70'	EL	6.5	0.80	0.240	1.54	70'	EL	34.5	
		TNAGRIT4	43.000	--	1.43	61.34	1.4	0.240	1.43	70'	EL	34.5	0.509	1.84	70'	EL	6.5	0.80	0.240	1.46	70'	EL	34.5	
		TNAGT5A	45.000	--	1.34	60.47	1.4	0.240	1.34	70'	EL	34.5	0.509	1.83	70'	EL	6.5	0.80	0.240	1.37	70'	EL	34.5	
		TNAGT5B	45.000	**3**	1.33	59.69	1.4	0.240	**1.33**	70'	EL	**34.5**	0.509	1.74	70'	EL	6.5	0.80	0.240	1.36	70'	EL	34.5	

LOAD FACTORS:

DESIGN LOAD RATING FACTORS	LIMIT STATE	γ_{DC}	γ_{DW}
	STRENGTH I	1.25	1.50
	SERVICE III	1.00	1.00

NOTES:

MINIMUM RATING FACTORS ARE BASED ON THE STRENGTH I AND SERVICE III LIMIT STATES.

ALLOWABLE STRESSES FOR SERVICE III LIMIT STATE ARE AS REQUIRED FOR DESIGN.

COMMENTS:

1.
2.
3.
4.

(#) CONTROLLING LOAD RATING

(1) DESIGN LOAD RATING (HL-93)

(2) DESIGN LOAD RATING (HS-20)

(3) LEGAL LOAD RATING **

** SEE CHART FOR VEHICLE TYPE

GIRDER LOCATION

I - INTERIOR GIRDER
EL - EXTERIOR LEFT GIRDER
ER - EXTERIOR RIGHT GIRDER

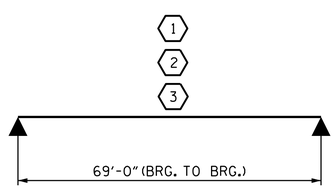

LRFR SUMMARY

FOR SPAN 'A'

PROJECT NO. BR-0108

WILKES COUNTY

STATION: 18+28.00 -L-

STATE OF NORTH CAROLINA
DEPARTMENT OF TRANSPORTATION
RALEIGH

LRFR SUMMARY FOR
70' CORED SLAB UNIT
90° SKEW
(NON-INTERSTATE TRAFFIC)

REVISIONS						SHEET NO.
NO.	BY:	DATE:	NO.	BY:	DATE:	S-4
1			3			TOTAL SHEETS
2			4			14

ms consultants, inc.
5444 Wade Park Blvd.
Suite 160
Raleigh, NC 27607
NC License Number : C-3239

NORTH CAROLINA PROFESSIONAL SEAL 037903 ENGINEER JEFFREY M KEPICH

DocuSigned by: Jeffrey Kepich 5/18/2021

DOCUMENT NOT CONSIDERED FINAL UNLESS ALL SIGNATURES COMPLETED

DRAWN BY : J.M. KEPICH DATE : 03/21
CHECKED BY : L.M. SAMPLES DATE : 04/21
DESIGN ENGINEER OF RECORD : J.M. KEPICH DATE : 05/21

$$$$$$$SYSTIME$$$$$$
$$$$$$$$$$$$$$$$$$DGN$$$$$$$$$$$$$$$$$$
$$$$USERNAME$$$$

DocuSign Envelope ID: 292C79D9-224C-4D38-B301-3E8F8C081A38

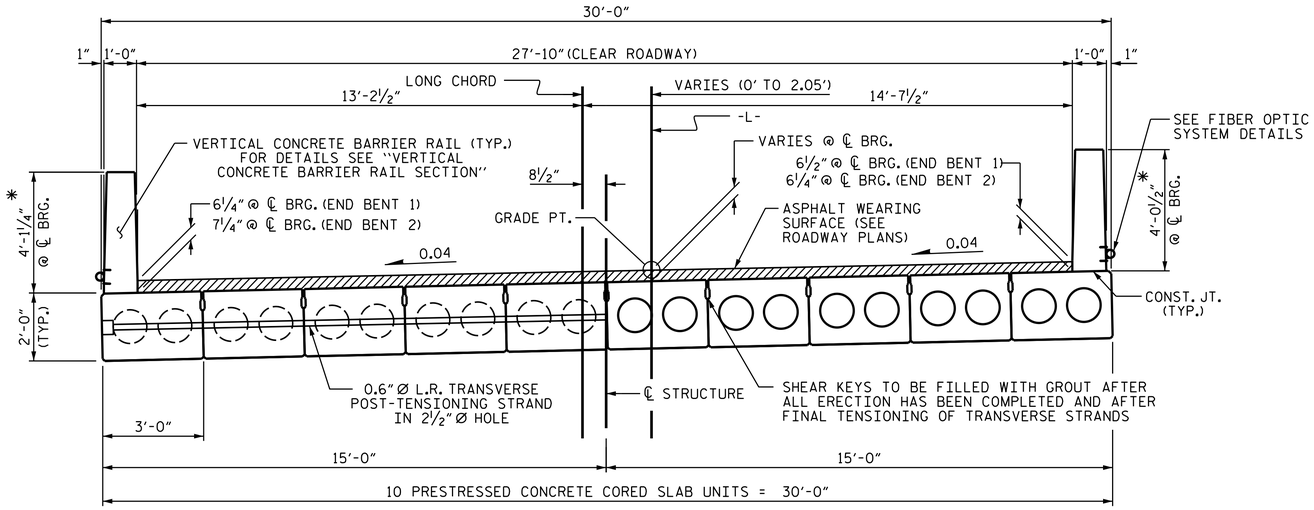

HALF SECTION
AT INTERMEDIATE DIAPHRAGMS

HALF SECTION
THROUGH VOIDS

TYPICAL SECTION

* - THE MAXIMUM BARRIER RAIL HEIGHT AND ASPHALT THICKNESS IS SHOWN. THE HEIGHT OF THE BARRIER RAIL AND ASPHALT THICKNESS VARIES WHILE THE TOP OF THE BARRIER RAIL FOLLOWS THE PROFILE OF THE GUTTERLINE. FOR RAIL HEIGHT DETAILS AND ASPHALT THICKNESS, SEE THE "VERTICAL CONCRETE BARRIER RAIL SECTION" DETAIL.

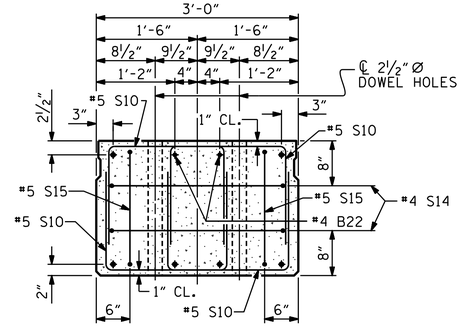

END ELEVATION

SHOWING PLACEMENT OF DOUBLE STIRRUPS AND LOCATION OF DOWEL HOLES. (STRAND LAYOUT NOT SHOWN.) INTERIOR SLAB UNIT SHOWN-EXTERIOR SLAB UNIT SIMILAR EXCEPT SHEAR KEY LOCATION.

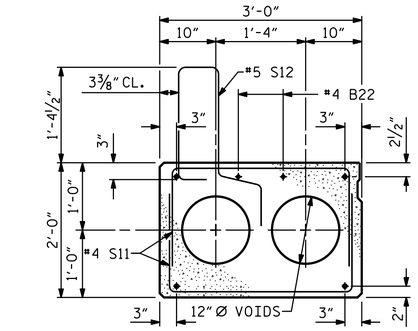

EXTERIOR SLAB SECTION

(FOR PRESTRESSED STRAND LAYOUT, SEE INTERIOR SLAB SECTION.)

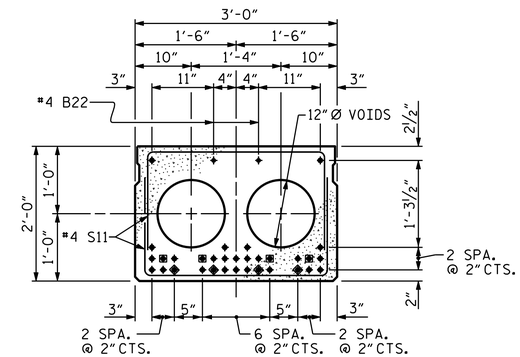

INTERIOR SLAB SECTION

(32 STRANDS REQUIRED)

0.6" Ø LOW RELAXATION STRAND LAYOUT

◆ BOND SHALL BE BROKEN ON THESE STRANDS FOR A DISTANCE OF 12'-0" FROM END OF CORED SLAB UNIT. SEE STANDARD SPECIFICATIONS, ARTICLE 1078-7.

◉ BOND SHALL BE BROKEN ON THESE STRANDS FOR A DISTANCE OF 10'-0" FROM END OF CORED SLAB UNIT. SEE STANDARD SPECIFICATIONS, ARTICLE 1078-7.

DEBONDING LEGEND

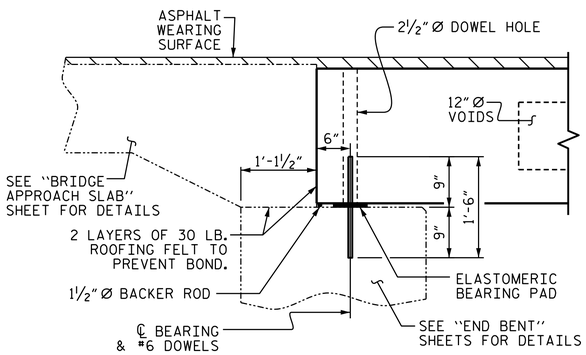

SECTION AT END BENT

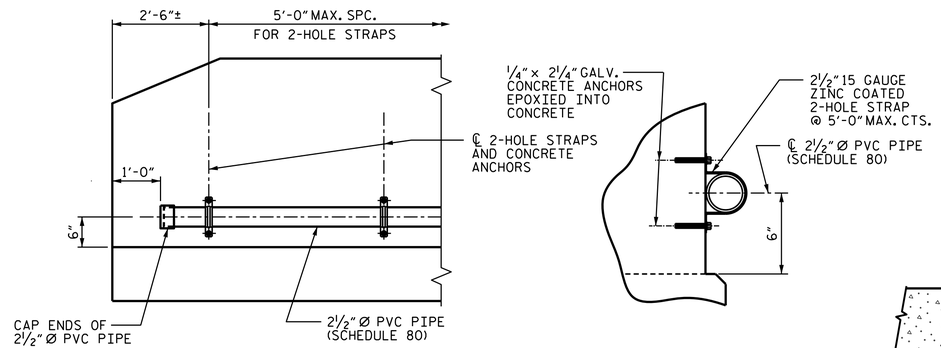

ELEVATION

SECTION

FIBER OPTIC CONDUIT SYSTEM DETAILS

2½" Ø SCHEDULE 80 PVC PIPE ATTACHED TO THE BACK OF BOTH RAILS FOR FUTURE FIBER OPTIC CABLE.

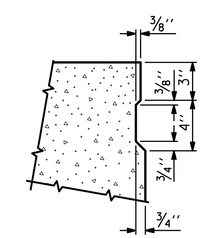

SHEAR KEY DETAIL

NOTE: OMIT SHEAR KEY ON OUTSIDE FACE OF EXTERIOR CORED SLABS.

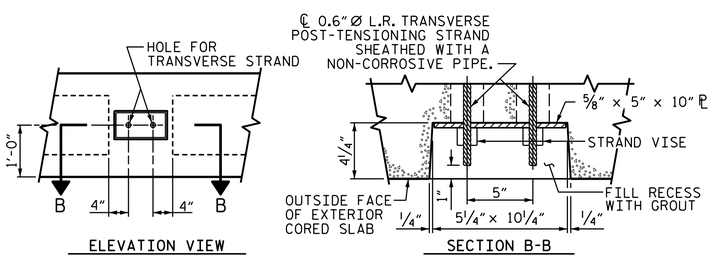

ELEVATION VIEW

SECTION B-B

GROUTED RECESS AT END OF POST-TENSIONED STRAND-CORED SLABS

PERMITTED THREADED INSERT CAST IN OUTSIDE FACE OF EXTERIOR UNIT AND RECESSED ⅜". SIZE TO BE DETERMINED BY CONTRACTOR.

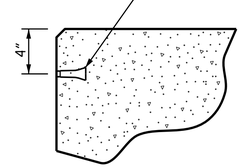

THREADED INSERT DETAIL

PROJECT NO. BR-0108
WILKES COUNTY
STATION: 18+28.00 -L-

SHEET 1 OF 3

STATE OF NORTH CAROLINA
DEPARTMENT OF TRANSPORTATION
RALEIGH

3'-0" x 2'-0" PRESTRESSED CONCRETE CORED SLAB UNIT

ms consultants, inc.
5444 Wade Park Blvd.
Suite 160
Raleigh, NC 27607
NC License Number : C-3239

NORTH CAROLINA PROFESSIONAL SEAL 037903 ENGINEER JEFFREY M. KEPICH

DocuSigned by: Jeffrey Kepich 5/18/2021

DOCUMENT NOT CONSIDERED FINAL UNLESS ALL SIGNATURES COMPLETED

REVISIONS								SHEET NO.
NO.	BY:	DATE:	NO.	BY:	DATE:			S-5
1			3					TOTAL SHEETS
2			4					14

DRAWN BY :	J.M. KEPICH	DATE :	03/21
CHECKED BY :	L.M. SAMPLES	DATE :	04/21
DESIGN ENGINEER OF RECORD :	J.M. KEPICH	DATE :	05/21

$$$$$$$SYSTIME$$$$$
$$$$$$$$$$$$$$$$$$DGN$$$$$$$$$$$$$$$$$$
$$$$USERNAME$$$$

DocuSign Envelope ID: 292C79D9-224C-4D38-B301-3E8F8C081A38

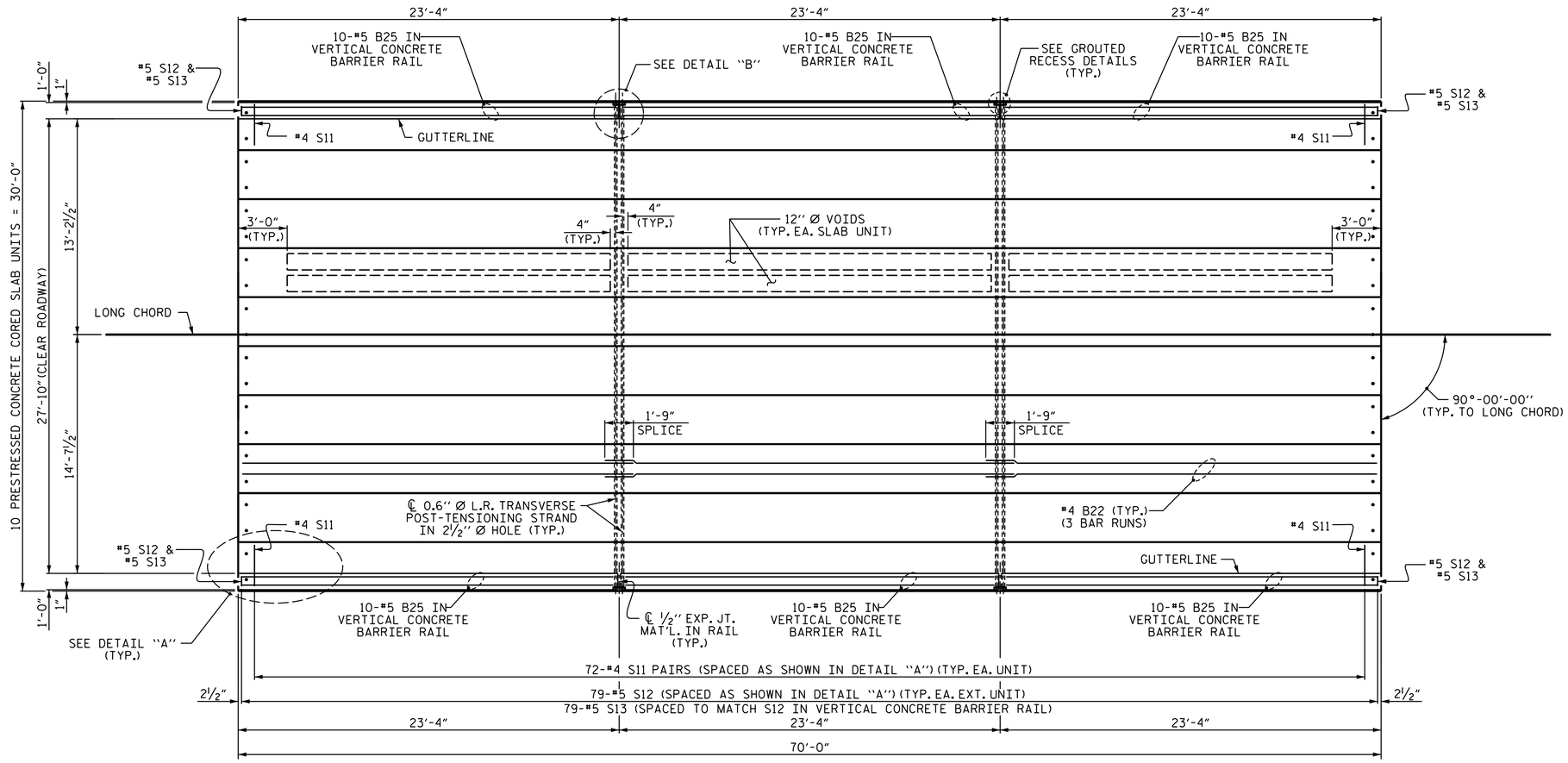

PLAN OF UNIT

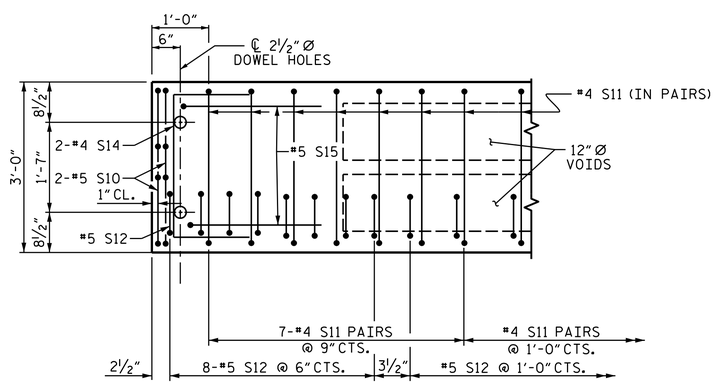

DETAIL "A"

(TYPICAL EACH END OF UNIT)
NOTE: EXTERIOR UNIT SHOWN - INTERIOR UNIT SIMILAR EXCEPT OMIT #5 S12 BARS.

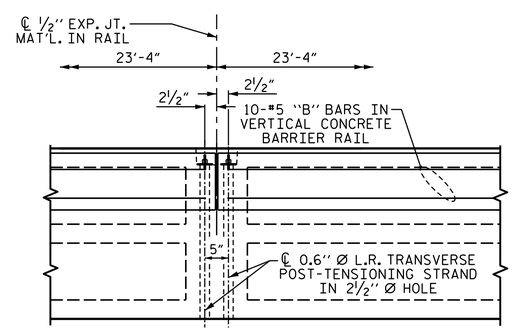

DETAIL "B"

#4 S11 BARS MAY BE SHIFTED AS NECESSARY TO MAINTAIN 1" CLEAR TO GROUTED RECESS AND 2½" Ø TRANSVERSE POST-TENSIONING STRAND HOLES

PROJECT NO. BR-0108
WILKES COUNTY
STATION: 18+28.00 -L-

SHEET 2 OF 3

STATE OF NORTH CAROLINA
DEPARTMENT OF TRANSPORTATION
RALEIGH

PLAN OF 70' UNIT 27'-10" CLEAR ROADWAY 90° SKEW

ms consultants, inc.
5444 Wade Park Blvd.
Suite 160
Raleigh, NC 27607
NC License Number : C-3239

NORTH CAROLINA PROFESSIONAL SEAL 037903 ENGINEER JEFFREY M KEPICH

DocuSign Jeffrey Kepich 5/18/2021
DOCUMENT NOT CONSIDERED FINAL UNLESS ALL SIGNATURES COMPLETED

REVISIONS							SHEET NO.
NO.	BY:	DATE:	NO.	BY:	DATE:		S-6
1			3				TOTAL SHEETS
2			4				14

DRAWN BY :	J.M. KEPICH	DATE :	03/21
CHECKED BY :	L.M. SAMPLES	DATE :	04/21
DESIGN ENGINEER OF RECORD :	J.M. KEPICH	DATE :	05/21

$$$$$$$SYSTIME$$$$$
$$$$$$$$$$$$$$$$$$$$DGN$$$$$$$$$$$$$$$$$$$$$
$$$$USERNAME$$$$

DocuSign Envelope ID: 292C79D9-224C-4D38-B301-3E8F8C081A38

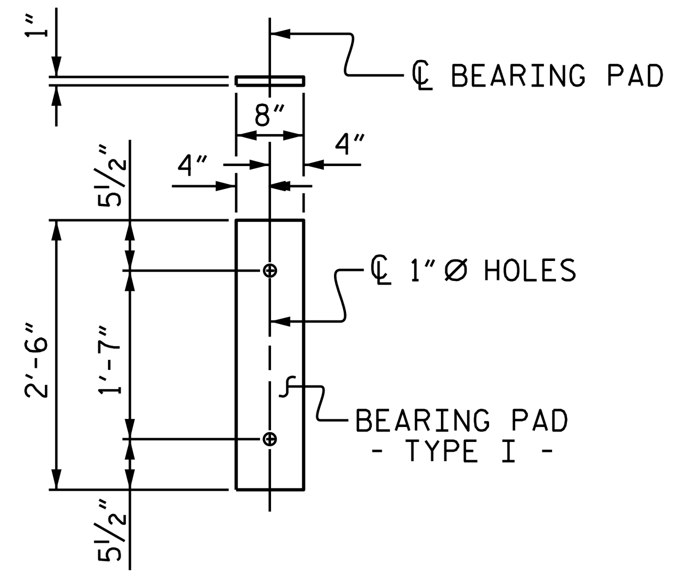

FIXED END
(TYPE I - 20 REQ'D)

ELASTOMERIC BEARING DETAILS

ELASTOMER IN ALL BEARINGS SHALL BE 60 DUROMETER HARDNESS.

BILL OF MATERIAL FOR ONE 70' CORED SLAB UNIT

				EXTERIOR UNIT		INTERIOR UNIT	
BAR	NUMBER	SIZE	TYPE	LENGTH	WEIGHT	LENGTH	WEIGHT
B22	6	#4	STR	24'-6"	98	24'-6"	98
S10	8	#5	3	4'-9"	40	4'-9"	40
S11	144	#4	3	5'-10"	561	5'-10"	561
*S12	79	#5	1	5'-7"	460		
S14	4	#4	3	5'-7"	15	5'-7"	15
S15	4	#5	3	7'-1"	30	7'-1"	30
REINFORCING STEEL			LBS.		744		744
* EPOXY COATED REINFORCING STEEL			LBS.		460		
8000 P.S.I. CONCRETE			CU. YDS.		11.8		11.8
0.6" Ø L.R. STRANDS			No.		32		32

BAR TYPES

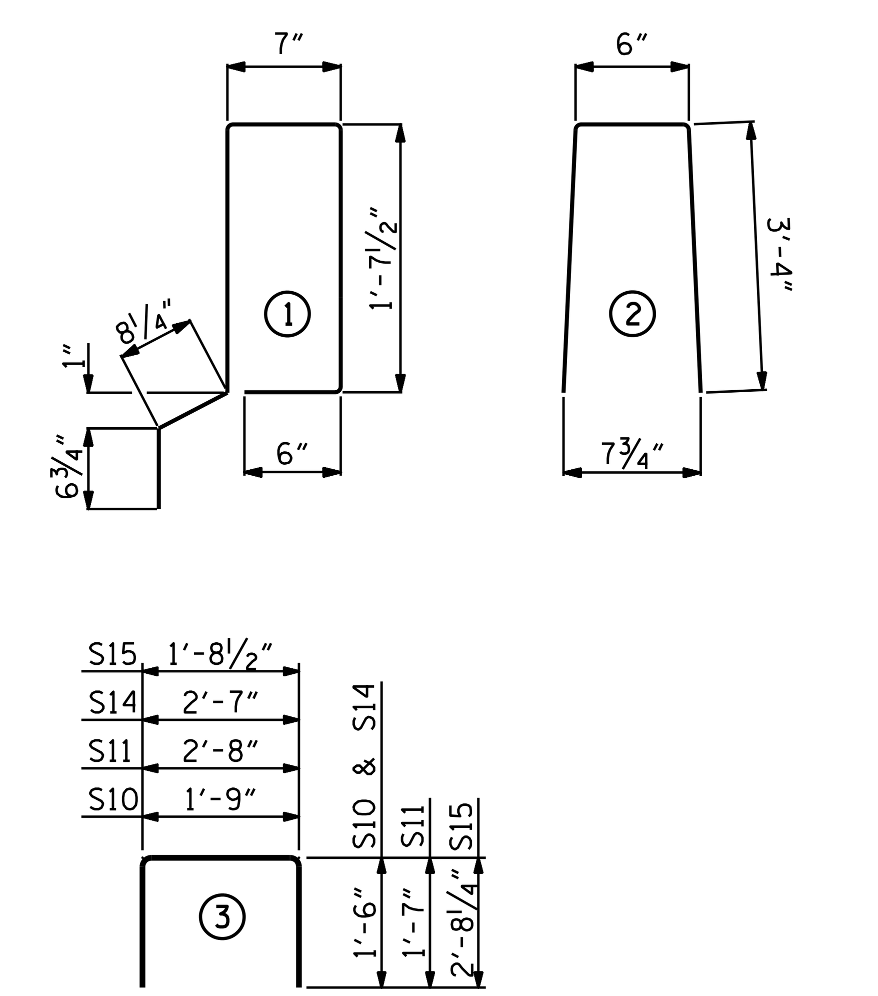

ALL BAR DIMENSIONS ARE OUT TO OUT

CORED SLABS REQUIRED

	NUMBER	LENGTH	TOTAL LENGTH
70' UNIT			
EXTERIOR C.S.	2	70'-0"	140'-0"
INTERIOR C.S.	8	70'-0"	560'-0"
TOTAL	10		700'-0"

GUTTERLINE ASPHALT THICKNESS & RAIL HEIGHT

	ASPHALT OVERLAY THICKNESS		RAIL HEIGHT	
	LEFT SIDE	RIGHT SIDE	LEFT SIDE	RIGHT SIDE
END BENT 1 ℄ BEARING	6¼"	6½"	4'-0¼"	4'-0½"
MIDSPAN	1 11/16"	1½"	3'-7 11/16"	3'-7½"
END BENT 2 ℄ BEARING	7¼"	6¼"	4'-1¼"	4'-0¼"

BILL OF MATERIAL FOR VERTICAL CONCRETE BARRIER RAIL

BAR	BARS PER PAIR OF EXTERIOR UNITS	TOTAL NO.	SIZE	TYPE	LENGTH	WEIGHT
	70' UNIT					
*B25	60	60	#5	STR	22'-11"	1434
*S13	158	158	#5	2	7'-2"	1181
* EPOXY COATED REINFORCING STEEL				LBS.		2615
CLASS AA CONCRETE				CU.YDS.		18.1
TOTAL VERTICAL CONCRETE BARRIER RAIL				LN. FT.		140.25

DEAD LOAD DEFLECTION AND CAMBER

	3'-0" x 2'-0"
70' CORED SLAB UNIT	0.6" Ø L.R. STRAND
CAMBER (SLAB ALONE IN PLACE)	2 15/16" ↑
DEFLECTION DUE TO SUPERIMPOSED DEAD LOAD**	¾" ↓
FINAL CAMBER	2 3/16" ↑

** INCLUDES FUTURE WEARING SURFACE

GRADE 270 STRANDS

	0.6" Ø L.R.
AREA (SQUARE INCHES)	0.217
ULTIMATE STRENGTH (LBS. PER STRAND)	58,600
APPLIED PRESTRESS (LBS. PER STRAND)	43,950

NOTES

ALL PRESTRESSING STRANDS SHALL BE 7-WIRE LOW RELAXATION GRADE 270 STRANDS AND SHALL CONFORM TO AASHTO M203 EXCEPT FOR SAMPLING REQUIREMENTS WHICH SHALL BE IN ACCORDANCE WITH THE STANDARD SPECIFICATIONS.

ALL REINFORCING STEEL CAST WITH THE CORED SLAB SECTIONS SHALL BE GRADE 60 AND SHALL BE INCLUDED IN THE UNIT PRICE BID FOR PRESTRESSED CONCRETE CORED SLABS.

RECESSES FOR TRANSVERSE STRANDS SHALL BE GROUTED AFTER THE TENSIONING OF THE STRANDS.

THE 2½" Ø DOWEL HOLES AT FIXED ENDS OF SLAB SECTIONS SHALL BE FILLED WITH NON-SHRINK GROUT.

THE BACKER RODS SHALL CONFORM TO THE REQUIREMENTS OF TYPE M BOND BREAKER. SEE SECTION 1028 OF THE STANDARD SPECIFICATIONS.

WHEN CORED SLABS ARE CAST, AN INTERNAL HOLD-DOWN SYSTEM SHALL BE EMPLOYED TO PREVENT VOIDS FROM RISING OR MOVING SIDEWAYS. AT LEAST SIX WEEKS PRIOR TO CASTING CORED SLABS, THE CONTRACTOR SHALL SUBMIT TO THE ENGINEER FOR REVIEW AND COMMENT, DETAILED DRAWINGS OF THE PROPOSED HOLD-DOWN SYSTEM. IN ADDITION TO STRUCTURAL DETAILS, LOCATION AND SPACING OF THE HOLD-DOWNS SHALL BE INDICATED.

THE TRANSFER OF LOAD FROM THE ANCHORAGES TO THE CORED SLAB UNIT SHALL BE DONE WHEN THE CONCRETE HAS REACHED A COMPRESSIVE STRENGTH OF NOT LESS THAN THE REQUIRED STRENGTH SHOWN IN THE "CONCRETE RELEASE STRENGTH" TABLE.

ALL REINFORCING STEEL IN VERTICAL CONCRETE BARRIER RAILS SHALL BE EPOXY COATED.

PRESTRESSING STRANDS SHALL BE CUT FLUSH WITH THE CORED SLAB UNIT ENDS.

APPLY EPOXY PROTECTIVE COATING TO CORED SLAB UNIT ENDS.

GROOVED CONTRACTION JOINTS, ½" IN DEPTH, SHALL BE TOOLED IN ALL EXPOSED FACES OF THE BARRIER RAIL AND IN ACCORDANCE WITH ARTICLE 825-10(B) OF THE STANDARD SPECIFICATIONS. A CONTRACTION JOINT SHALL BE LOCATED AT EACH THIRD POINT BETWEEN BARRIER RAIL EXPANSION JOINTS. ONLY ONE CONTRACTION JOINT IS REQUIRED AT MIDPOINT OF BARRIER RAIL SEGMENTS LESS THAN 20 FEET IN LENGTH AND NO CONTRACTION JOINTS ARE REQUIRED FOR THOSE SEGMENTS LESS THAN 10 FEET IN LENGTH.

FLAME CUTTING OF THE TRANSVERSE POST-TENSIONING STRAND IS NOT ALLOWED.

MAINTAIN A SYMMETRIC TENSION FORCE BETWEEN EACH PAIR OF TRANSVERSE POST TENSIONING STRANDS IN THE DIAPHRAGM.

THE #4 S11 STIRRUPS MAY BE SHIFTED AS NECESSARY TO MAINTAIN 1" CLEAR TO THE GROUTED RECESS.

FOR GROUT FOR STRUCTURES, SEE SPECIAL PROVISIONS.

THE PERMITTED THREADED INSERTS ARE DETAILED AS AN OPTION FOR THE CONTRACTOR TO ATTACH FALSEWORK AND FORMWORK DURING CONSTRUCTION.

THE PERMITTED THREADED INSERTS IN THE EXTERIOR UNITS SHALL BE SIZED BY THE CONTRACTOR, SPACED AT 4'-0" CENTERS AND GALVANIZED IN ACCORDANCE WITH SECTION 1076 OF THE STANDARD SPECIFICATIONS. STAINLESS STEEL THREADED INSERTS MAY BE USED AS AN ALTERNATE.

THE PERMITTED THREADED INSERTS SHALL BE GROUTED BY THE CONTRACTOR IMMEDIATELY FOLLOWING REMOVAL OF THE FALSEWORK.

THE COST OF THE PERMITTED THREADED INSERTS SHALL BE INCLUDED IN THE PRICE BID FOR THE PRECAST UNITS.

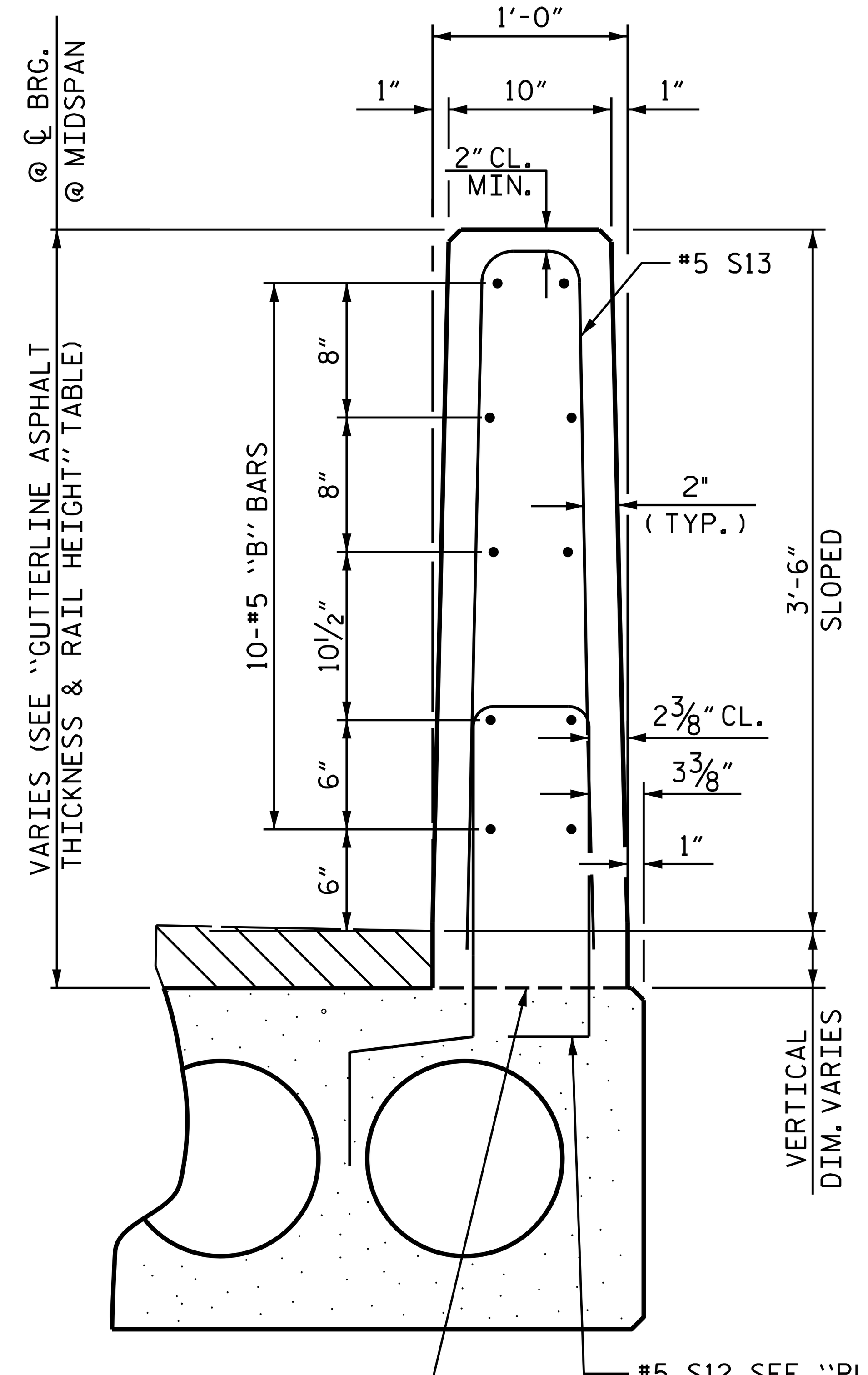

SECTION THRU RAIL

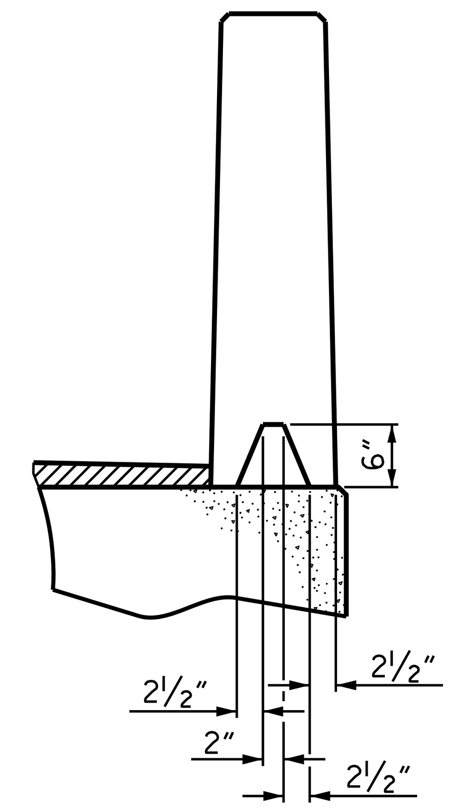

SECTION S-S
AT DAM IN OPEN JOINT
(THIS IS TO BE USED ONLY WHEN SLIP FORM IS USED)

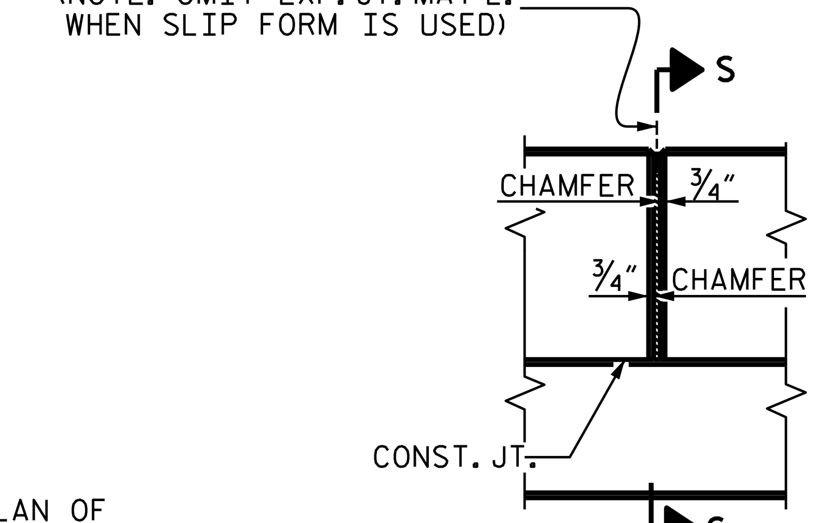

ELEVATION AT EXPANSION JOINTS

VERTICAL CONCRETE BARRIER RAIL DETAILS

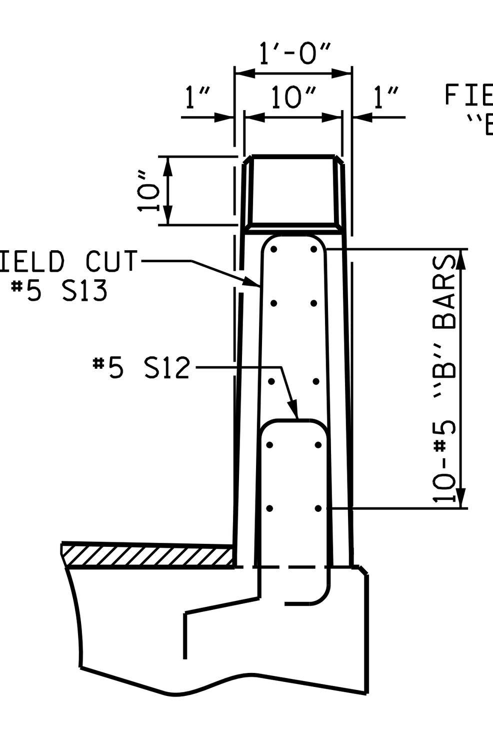

END VIEW

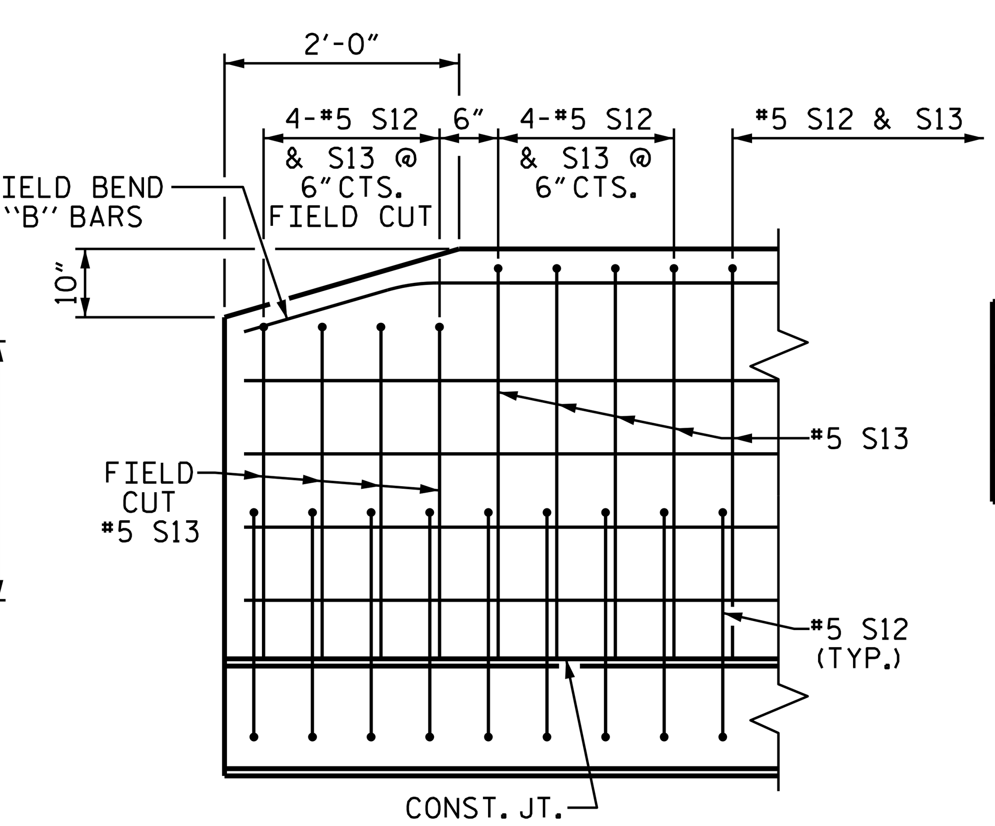

SIDE VIEW

END OF RAIL DETAILS

CONCRETE RELEASE STRENGTH

UNIT	PSI
70' UNITS	6000

PROJECT NO. BR-0108
WILKES COUNTY
STATION: 18+28.00 -L-
SHEET 3 OF 3

STATE OF NORTH CAROLINA
DEPARTMENT OF TRANSPORTATION
RALEIGH

3'-0" X 2'-0" PRESTRESSED CONCRETE CORED SLAB UNIT

ms consultants, inc.
5444 Wade Park Blvd.
Suite 160
Raleigh, NC 27607
NC License Number : C-3239

NORTH CAROLINA PROFESSIONAL SEAL 037903 ENGINEER JEFFREY M KEPICH
DocuSigned by: Jeffrey Kepich 5/18/2021
DOCUMENT NOT CONSIDERED FINAL UNLESS ALL SIGNATURES COMPLETED

REVISIONS					
NO.	BY:	DATE:	NO.	BY:	DATE:
1			3		
2			4		

SHEET NO. S-7
TOTAL SHEETS 14

DRAWN BY :	J.M. KEPICH	DATE :	03/21
CHECKED BY :	L.M. SAMPLES	DATE :	04/21
DESIGN ENGINEER OF RECORD :	J.M. KEPICH	DATE :	05/21

$$$$$$SYSTIME$$$$$
$$$$$$$$$$$$$$$$$$$$$$$$$$DGN$$$$$$$$$$$$$$$$$$$$$$$$
$$$$USERNAME$$$$

DocuSign Envelope ID: 292C79D9-224C-4D38-B301-3E8F8C081A38

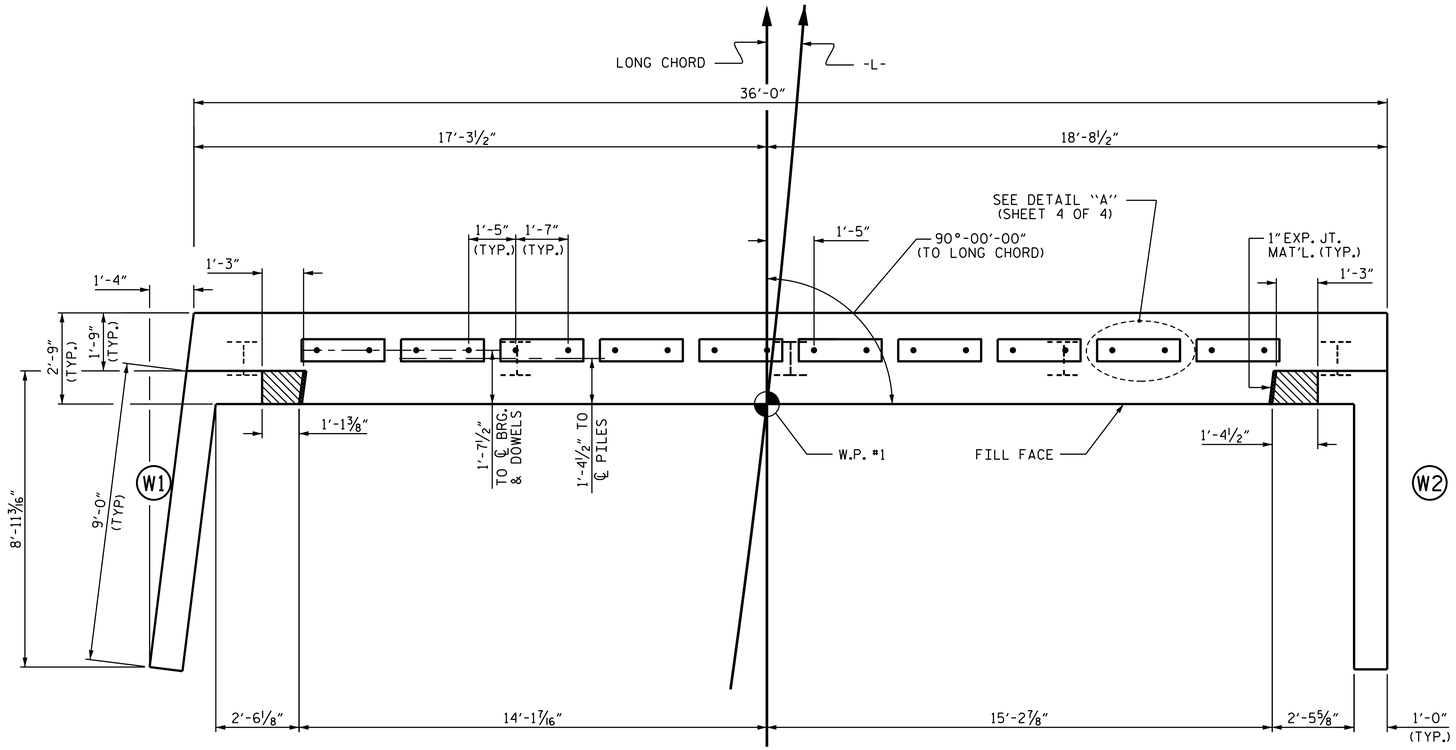

PLAN

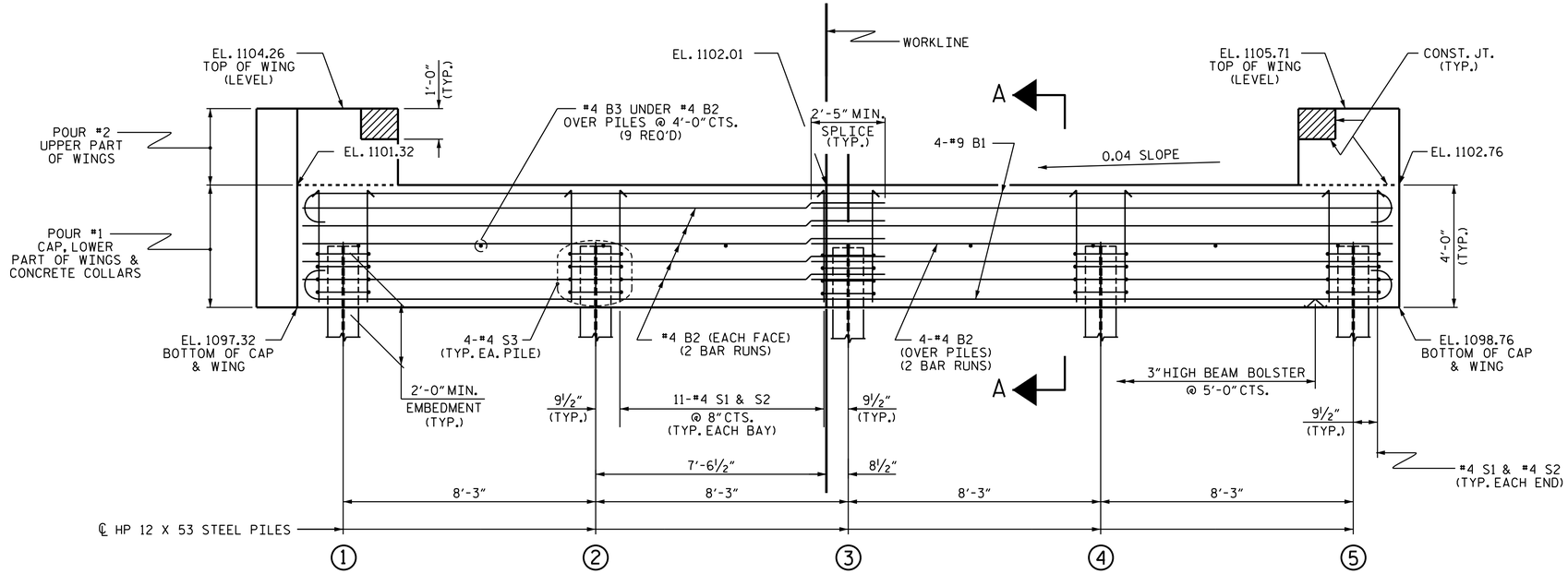

ELEVATION

WINGS NOT SHOWN FOR CLARITY.
FOR SECTION A-A, SEE SHEET 4 OF 4.
CONCRETE COLLARS FOR STEEL PILES NOT SHOWN IN PLAN AND ELEVATION VIEWS FOR CLARITY.
SEE "CORROSION PROTECTION FOR STEEL PILES DETAIL", SHEET 4 OF 4.

NOTES

STIRRUPS IN CAP MAY BE SHIFTED AS NECESSARY TO CLEAR DOWELS.

THE CONCRETE IN THE SHADED AREA OF THE WING SHALL BE POURED AFTER THE VERTICAL CONCRETE BARRIER RAIL IS CAST IF SLIP FORMING IS USED.

FOR PILE SPLICE DETAILS, SEE SHEET 4 OF 4.

FOR WING DETAILS, SEE SHEET 3 OF 4.

TOP OF PILE ELEVATIONS	
1	1099.38
2	1099.71
3	1100.04
4	1100.37
5	1100.70

PROJECT NO. BR-0108
WILKES COUNTY
STATION: 18+28.00 -L-

STATE OF NORTH CAROLINA
DEPARTMENT OF TRANSPORTATION
RALEIGH

SUBSTRUCTURE

END BENT No. 1

REVISIONS						SHEET NO.
NO.	BY:	DATE:	NO.	BY:	DATE:	S-9
1			3			TOTAL SHEETS
2			4			14

DOCUMENT NOT CONSIDERED FINAL UNLESS ALL SIGNATURES COMPLETED

NORTH CAROLINA PROFESSIONAL SEAL 037903 ENGINEER JEFFREY M. KEPICH
DocuSigned by: Jeffrey Kepich 5/18/2021

ms consultants, inc.
5444 Wade Park Blvd.
Suite 160
Raleigh, NC 27607
NC License Number : C-3239

DRAWN BY :	J.M. KEPICH	DATE :	03/21
CHECKED BY :	L.M. SAMPLES	DATE :	04/21
DESIGN ENGINEER OF RECORD :	J.M. KEPICH	DATE :	05/21

$$$$$$$SYSTIME$$$$$
$$$$$$$$$$$$$$$$$$DGN$$$$$$$$$$$$$$$$$$
$$$$$USERNAME$$$$$

DocuSign Envelope ID: 292C79D9-224C-4D38-B301-3E8F8C081A38

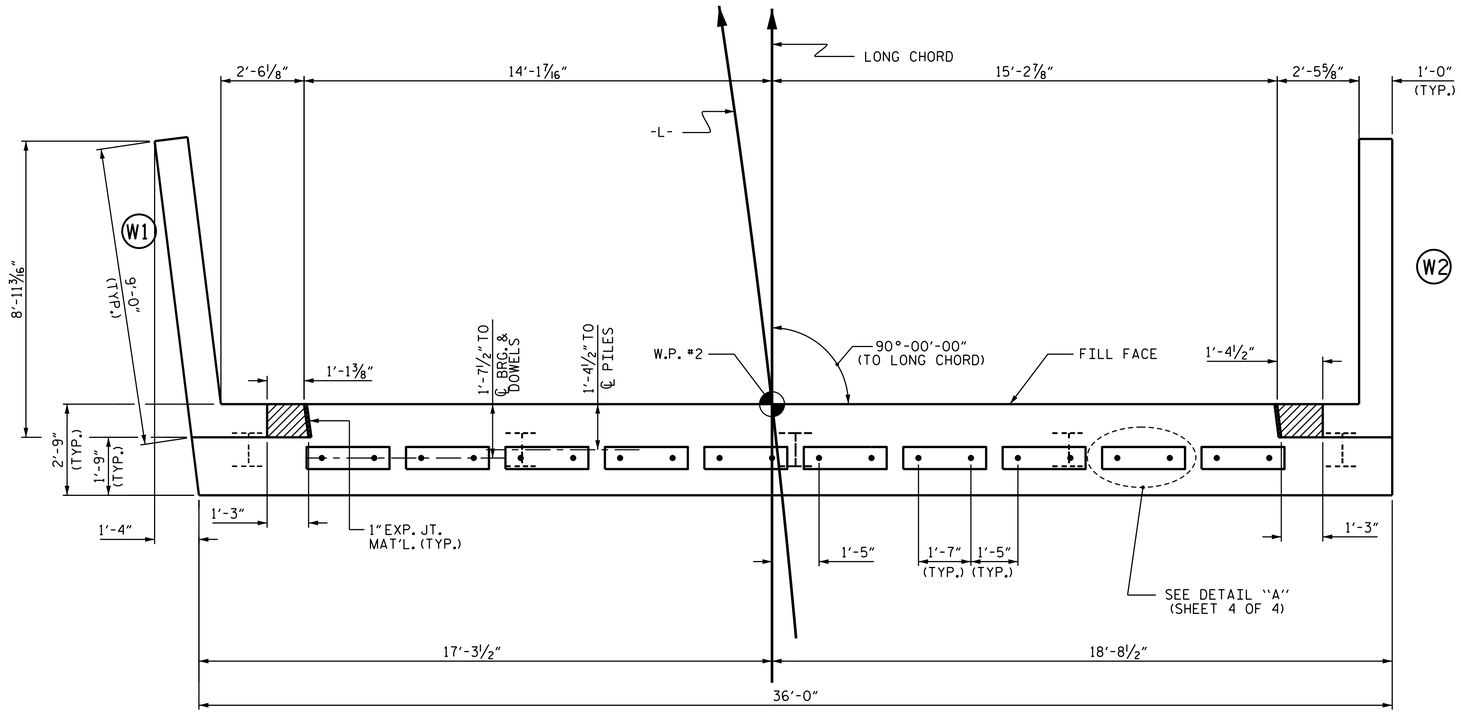

PLAN

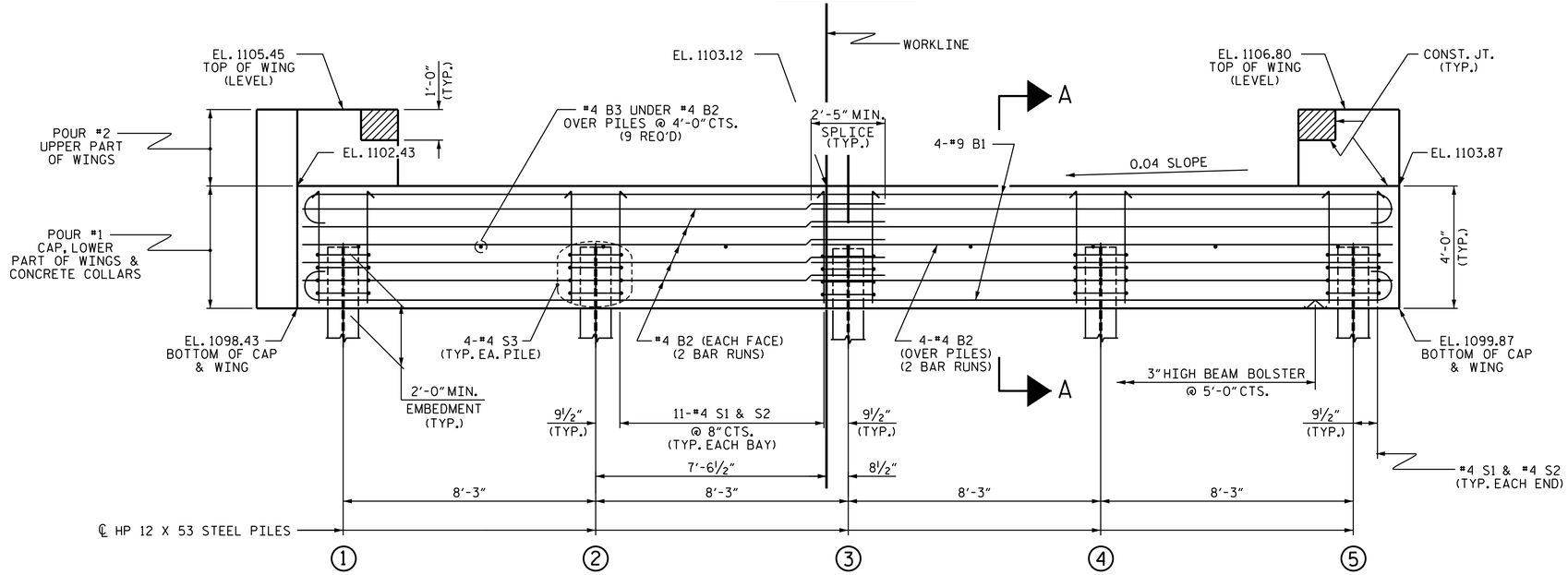

ELEVATION

WINGS NOT SHOWN FOR CLARITY.
FOR SECTION A-A, SEE SHEET 4 OF 4.
CONCRETE COLLARS FOR STEEL PILES NOT SHOWN IN PLAN AND ELEVATION VIEWS FOR CLARITY.
SEE "CORROSION PROTECTION FOR STEEL PILES DETAIL", SHEET 4 OF 4.

NOTES

STIRRUPS IN CAP MAY BE SHIFTED AS NECESSARY TO CLEAR DOWELS.

THE CONCRETE IN THE SHADED AREA OF THE WING SHALL BE POURED AFTER THE VERTICAL CONCRETE BARRIER RAIL IS CAST IF SLIP FORMING IS USED.

FOR PILE SPLICE DETAILS, SEE SHEET 4 OF 4.

FOR WING DETAILS, SEE SHEET 3 OF 4.

TOP OF PILE ELEVATIONS	
1	1100.49
2	1100.82
3	1101.15
4	1101.48
5	1101.81

PROJECT NO. BR-0108
WILKES COUNTY
STATION: 18+28.00 -L-

STATE OF NORTH CAROLINA
DEPARTMENT OF TRANSPORTATION
RALEIGH

SUBSTRUCTURE

END BENT No. 2

DRAWN BY : J.M. KEPICH	DATE : 03/21
CHECKED BY : L.M. SAMPLES	DATE : 04/21
DESIGN ENGINEER OF RECORD : J.M. KEPICH	DATE : 05/21

ms consultants, inc.
5444 Wade Park Blvd.
Suite 160
Raleigh, NC 27607
NC License Number : C-3239

NORTH CAROLINA PROFESSIONAL SEAL 037903 ENGINEER JEFFREY M. KEPICH
DocuSigned by: Jeffrey Kepich 5/18/2021
DOCUMENT NOT CONSIDERED FINAL UNLESS ALL SIGNATURES COMPLETED

REVISIONS						SHEET NO.
NO.	BY:	DATE:	NO.	BY:	DATE:	S-10
1			3			TOTAL SHEETS
2			4			14

$$$$$$$SYSTIME$$$$$
$$$$$$$$$$$$$$$$$$$$DGN$$$$$$$$$$$$$$$$$$$$
$$$$$USERNAME$$$$$

DocuSign Envelope ID: 292C79D9-224C-4D38-B301-3E8F8C081A38

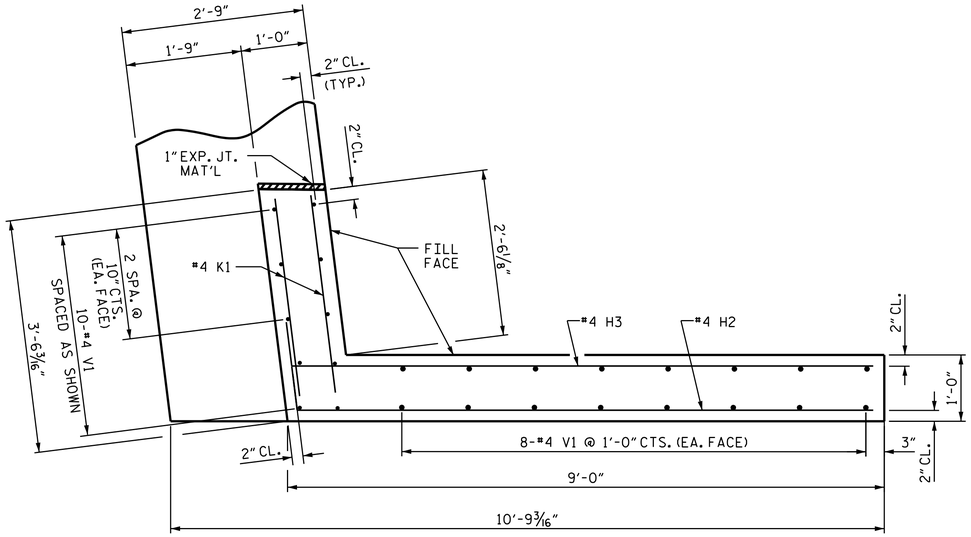

PLAN OF WING (W1)

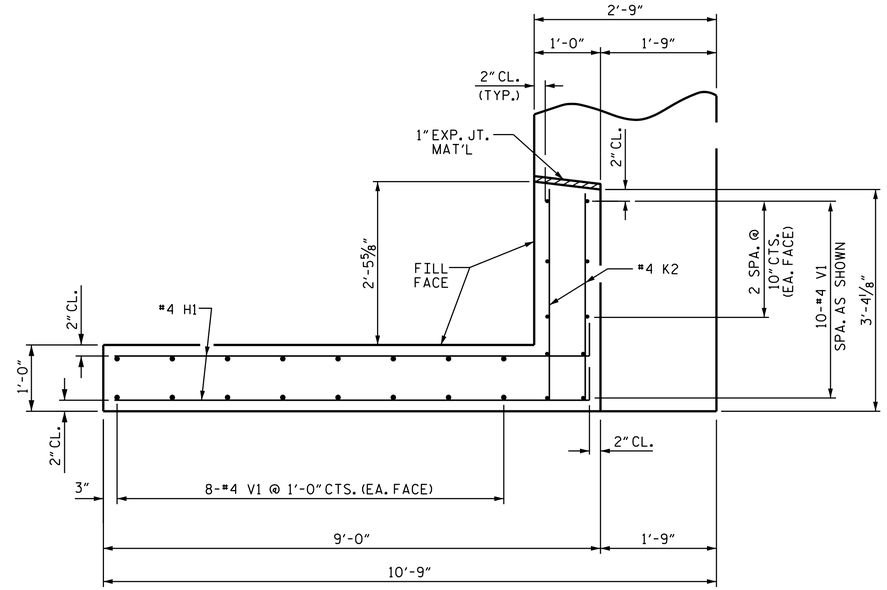

PLAN OF WING (W2)

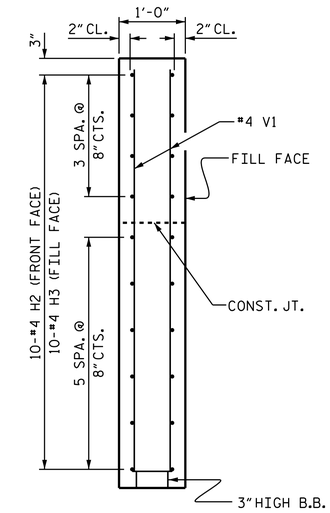

SECTION X-X

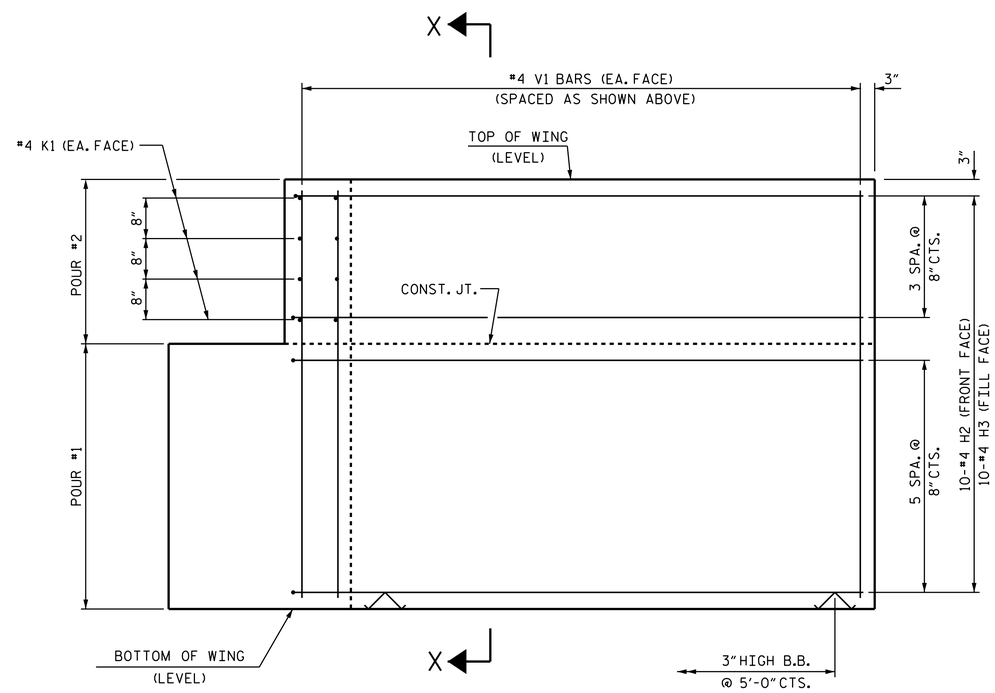

ELEVATION OF WING (W1)

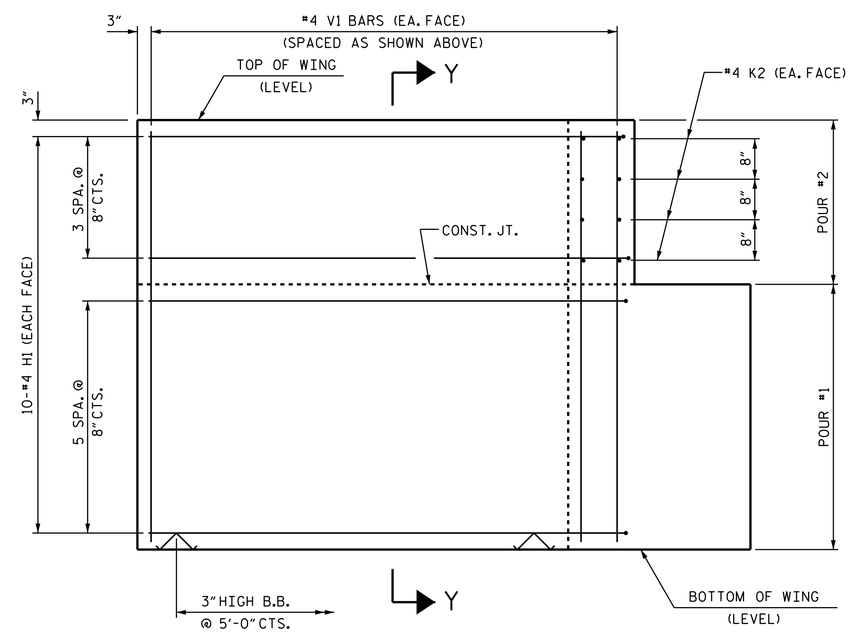

ELEVATION OF WING (W2)

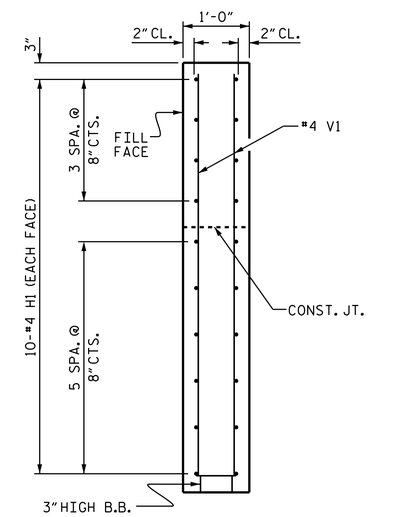

SECTION Y-Y

PROJECT NO. BR-0108

WILKES COUNTY

STATION: 18+28.00 -L-

WING DETAILS

DRAWN BY : J.M. KEPICH DATE : 03/21

CHECKED BY : L.M. SAMPLES DATE : 04/21

DESIGN ENGINEER OF RECORD : J.M. KEPICH DATE : 05/21

ms consultants, inc.
5444 Wade Park Blvd.
Suite 160
Raleigh, NC 27607
NC License Number : C-3239

NORTH CAROLINA PROFESSIONAL SEAL 037903 ENGINEER JEFFREY M. KEPICH

Jeffrey Kepich 5/18/2021

DOCUMENT NOT CONSIDERED FINAL UNLESS ALL SIGNATURES COMPLETED

STATE OF NORTH CAROLINA
DEPARTMENT OF TRANSPORTATION
RALEIGH

SUBSTRUCTURE

END BENT
WING DETAILS

REVISIONS								
NO.	BY:	DATE:	NO.	BY:	DATE:			
1			3					
2			4					

SHEET NO. S-11

TOTAL SHEETS 14

$$$$$$$SYSTIME$$$$$$
$$$$$$$$$$$$$$$$DGN$$$$$$$$$$$$$$$$$$$$
$$$$USERNAME$$$$

DocuSign Envelope ID: 292C79D9-224C-4D38-B301-3E8F8C081A38

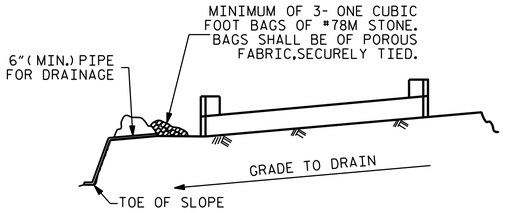

BAGGED STONE AND PIPE SHALL BE PLACED IMMEDIATELY AFTER COMPLETION OF END BENT EXCAVATION. PIPE MAY BE EITHER CONCRETE, CORRUGATED STEEL, CORRUGATED ALUMINUM ALLOY, OR CORRUGATED PLASTIC. PERFORATED PIPE WILL NOT BE ALLOWED.

BAGGED STONE SHALL REMAIN IN PLACE UNTIL THE ENGINEER DIRECTS THAT IT BE REMOVED. THE CONTRACTOR SHALL REMOVE AND DISPOSE OF SILT ACCUMULATIONS AT BAGGED STONE WHEN SO DIRECTED BY THE ENGINEER. BAGS SHALL BE REMOVED AND REPLACED WHENEVER THE ENGINEER DETERMINES THAT THEY HAVE DETERIORATED AND LOST THEIR EFFECTIVENESS.

NO SEPARATE PAYMENT WILL BE MADE FOR THIS WORK AND THE ENTIRE COST OF THIS WORK SHALL BE INCLUDED IN THE UNIT CONTRACT PRICE BID FOR THE SEVERAL PAY ITEMS.

TEMPORARY DRAINAGE AT END BENT

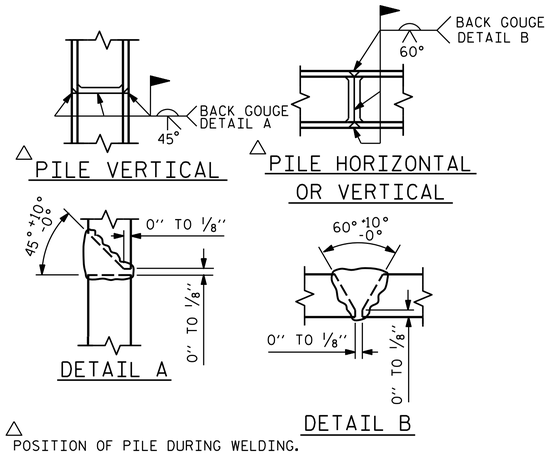

PILE SPLICE DETAILS

BAR TYPES

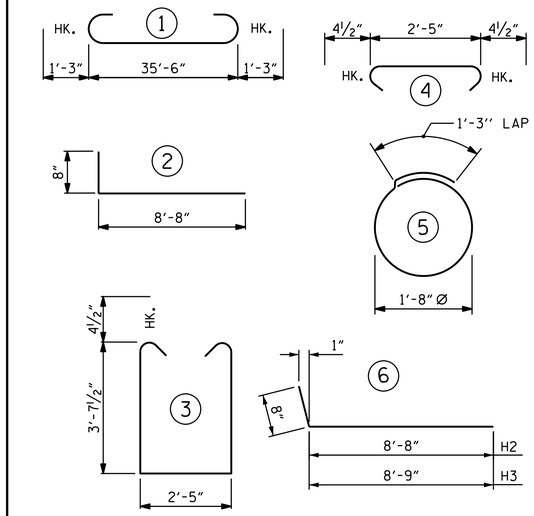

ALL BAR DIMENSIONS ARE OUT TO OUT.

END BENT No. 1	END BENT No. 2
HP 12 X 53 STEEL PILES NO: 5 LIN. FT.= 75.0	HP 12 X 53 STEEL PILES NO: 5 LIN. FT.= 75.0
PILE DRIVING EQUIPMENT SETUP FOR HP 12 X 53 STEEL PILES NO: 5	PILE DRIVING EQUIPMENT SETUP FOR HP 12 X 53 STEEL PILES NO: 5
STEEL PILE POINTS NO: 5	STEEL PILE POINTS NO: 5

BILL OF MATERIAL FOR ONE END BENT

BAR	NO.	SIZE	TYPE	LENGTH	WEIGHT
B1	8	#9	1	38'-0"	1034
B2	28	#4	STR	19'-1"	357
B3	9	#4	STR	2'-5"	15
D1	20	#6	STR	1'-6"	45
H1	20	#4	2	9'-4"	125
H2	10	#4	6	9'-4"	62
H3	10	#4	6	9'-5"	63
K1	8	#4	STR	3'-0"	16
K2	8	#4	STR	3'-2"	18
S1	46	#4	3	10'-5"	320
S2	46	#4	4	3'-2"	97
S3	20	#4	5	6'-6"	87
V1	52	#4	STR	6'-6"	235

REINFORCING STEEL (FOR ONE END BENT) 2474 LBS.

CLASS A CONCRETE BREAKDOWN (FOR ONE END BENT)

POUR #1 CAP, LOWER PART OF WINGS & COLLARS 17.9 C.Y.

POUR #2 UPPER PART OF WINGS 2.6 C.Y.

TOTAL CLASS A CONCRETE 20.5 C.Y.

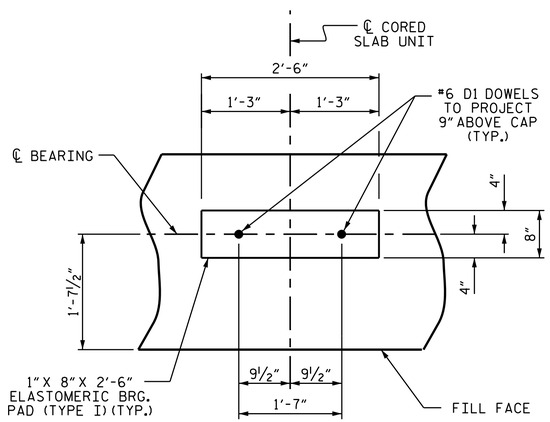

DETAIL "A"

(END BENT No. 1 SHOWN, END BENT No. 2 SIMILAR BY ROTATION)

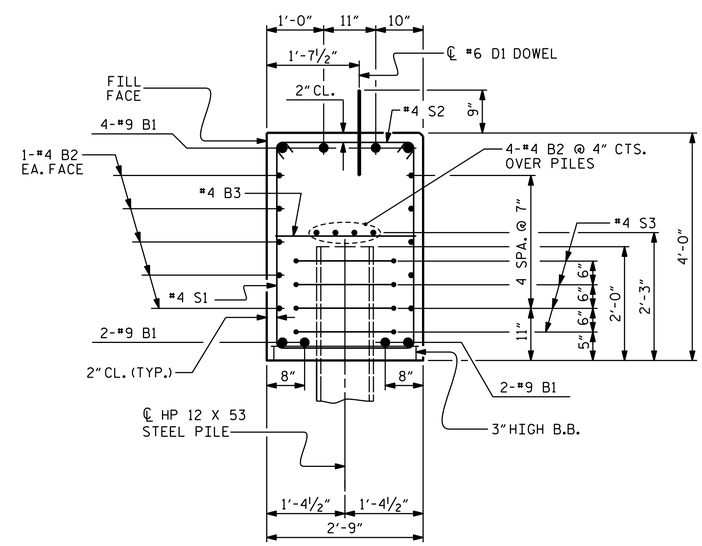

SECTION A-A

(CONCRETE COLLAR NOT SHOWN FOR CLARITY. SEE "CORROSION PROTECTION FOR STEEL PILES DETAIL.")

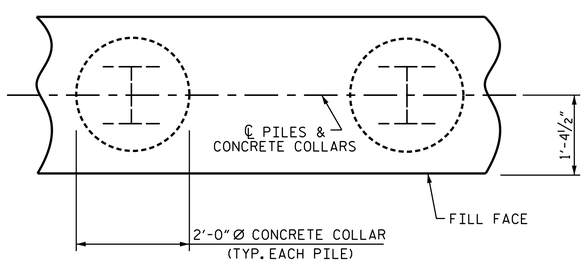

PLAN

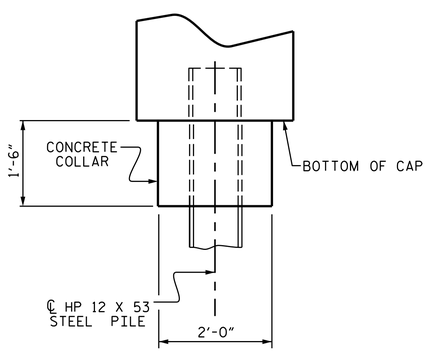

ELEVATION

CORROSION PROTECTION FOR STEEL PILES DETAIL

(END BENT No. 1 SHOWN, END BENT No. 2 SIMILAR BY ROTATION)

PROJECT NO. BR-0108

WILKES COUNTY

STATION: 18+28.00 -L-

STATE OF NORTH CAROLINA
DEPARTMENT OF TRANSPORTATION
RALEIGH

SUBSTRUCTURE

END BENT No. 1 & 2 DETAILS

ms consultants, inc.
5444 Wade Park Blvd.
Suite 160
Raleigh, NC 27607
NC License Number : C-3239

NORTH CAROLINA PROFESSIONAL SEAL 037903 ENGINEER JEFFREY M KEPICH

DocuSigned by: Jeffrey Kepich 5/18/2021

DOCUMENT NOT CONSIDERED FINAL UNLESS ALL SIGNATURES COMPLETED

REVISIONS								SHEET NO.
NO.	BY:	DATE:	NO.	BY:	DATE:			S-12
1			3					TOTAL SHEETS
2			4					14

DRAWN BY :	J.M. KEPICH	DATE :	03/21
CHECKED BY :	L.M. SAMPLES	DATE :	04/21
DESIGN ENGINEER OF RECORD :	J.M. KEPICH	DATE :	05/21

$$$$$$$SYSTIME$$$$$$
$$$$$$$$$$$$$$$$DGN$$$$$$$$$$$$$$$$$$$$
$$$$USERNAME$$$$

DocuSign Envelope ID: 292C79D9-224C-4D38-B301-3E8F8C081A38

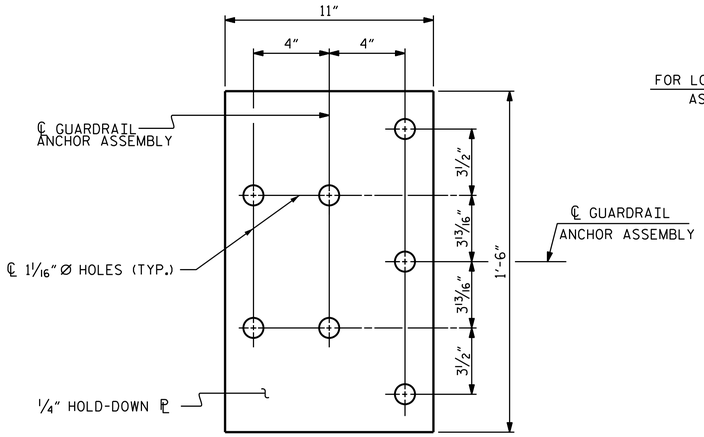

PLAN

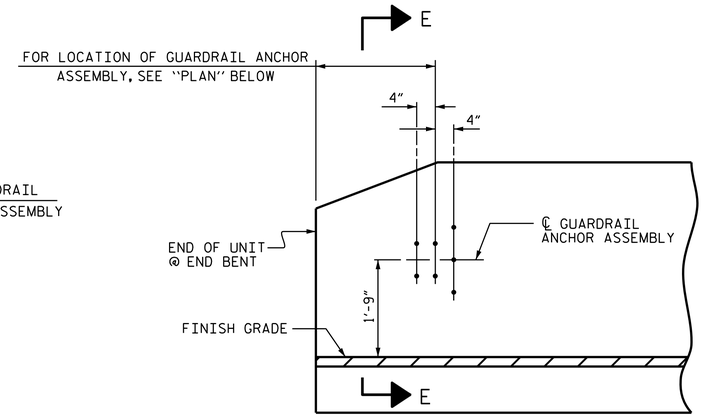

ELEVATION

NOTES

THE GUARDRAIL ANCHOR ASSEMBLY SHALL CONSIST OF A 1/4" HOLD DOWN PLATE AND 7 - 7/8" Ø BOLTS WITH NUTS AND WASHERS.

THE HOLD-DOWN PLATE SHALL CONFORM TO AASHTO M270 GRADE 36. AFTER FABRICATION, THE HOLD-DOWN PLATE SHALL BE HOT-DIP GALVANIZED IN ACCORDANCE WITH AASHTO M111.

BOLTS SHALL CONFORM TO THE REQUIREMENTS OF ASTM A307 AND NUTS SHALL CONFORM TO THE REQUIREMENTS OF AASHTO M291. BOLTS, NUTS AND WASHERS SHALL BE GALVANIZED. (AT THE CONTRACTOR'S OPTION, STAINLESS STEEL BOLTS, NUTS AND WASHERS MAY BE USED AS AN ALTERNATE FOR THE 7/8" Ø GALVANIZED BOLTS, NUTS AND WASHERS. THEY SHALL CONFORM TO OR EXCEED THE MECHANICAL REQUIREMENTS OF ASTM A307. THE USE OF THIS ALTERNATE SHALL BE APPROVED BY THE ENGINEER.)

THE GUARDRAIL ANCHOR ASSEMBLY IS REQUIRED AT ALL POINTS WHERE APPROACH GUARDRAIL IS TO BE ATTACHED TO THE END OF BARRIER RAIL. FOR POINTS OF ATTACHMENT, SEE SKETCH.

AFTER INSTALLATION, THE EXPOSED THREAD OF THE BOLT SHALL BE BURRED WITH A SHARP POINTED TOOL.

THE COST OF THE GUARDRAIL ANCHOR ASSEMBLY SHALL BE INCLUDED IN THE UNIT CONTRACT PRICE BID FOR VERTICAL CONCRETE BARRIER RAIL.

THE VERTICAL REINFORCING BARS MAY BE SHIFTED SLIGHTLY IN THE VERTICAL CONCRETE BARRIER RAIL TO CLEAR ASSEMBLY BOLTS.

THE 1 1/4" Ø HOLES SHALL BE FORMED OR DRILLED WITH A CORE BIT. IMPACT TOOLS WILL NOT BE PERMITTED. ANY CONCRETE DAMAGED BY THIS WORK SHALL BE REPAIRED TO THE SATISFACTION OF THE ENGINEER.

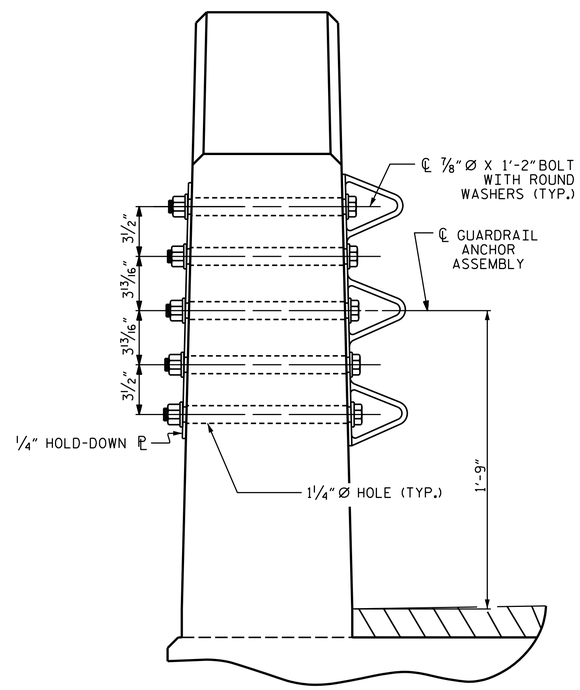

SECTION E-E

GUARDRAIL ANCHOR ASSEMBLY DETAILS

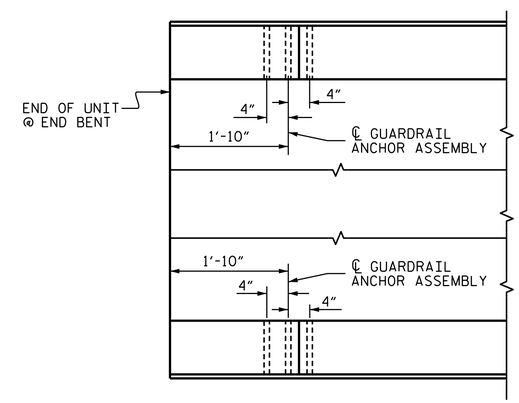

PLAN

LOCATION OF ANCHORS FOR GUARDRAIL

END BENT #1 SHOWN, END BENT #2 SIMILAR.

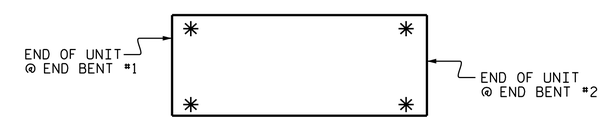

SKETCH SHOWING POINTS OF ATTACHMENT

✳ DENOTES GUARDRAIL ANCHOR ASSEMBLY

PROJECT NO. BR-0108
WILKES COUNTY
STATION: 18+28.00 -L-

STATE OF NORTH CAROLINA
DEPARTMENT OF TRANSPORTATION
RALEIGH

STANDARD
GUARDRAIL ANCHORAGE DETAILS FOR VERTICAL CONCRETE BARRIER RAIL

REVISIONS						SHEET NO.
NO.	BY:	DATE:	NO.	BY:	DATE:	S-8
1			3			TOTAL SHEETS
2			4			14

ms consultants, inc.
5444 Wade Park Blvd.
Suite 160
Raleigh, NC 27607
NC License Number : C-3239

NORTH CAROLINA PROFESSIONAL SEAL 037903 ENGINEER JEFFREY M KEPICH
DocuSigned by: Jeffrey Kepich 5/18/2021
DOCUMENT NOT CONSIDERED FINAL UNLESS ALL SIGNATURES COMPLETED

ASSEMBLED BY : J.M. KEPICH	DATE : 11/20
CHECKED BY : L.M. SAMPLES	DATE : 04/21
DRAWN BY : MAA 5/10	REV. 1/15 MAA/TMG
CHECKED BY : GM 5/10	REV. 12/17 MAA/THC
	REV. 5/18 MAA/THC

$$$$$$SYSTIME$$$$$
$$$$$$$$$$$$$$$$$$$$$$DGN$$$$$$$$$$$$$$$$$$$$$
$$$$USERNAME$$$$

(SHT 1) STD. NO. GRA3

DocuSign Envelope ID: 292C79D9-224C-4D38-B301-3E8F8C081A38

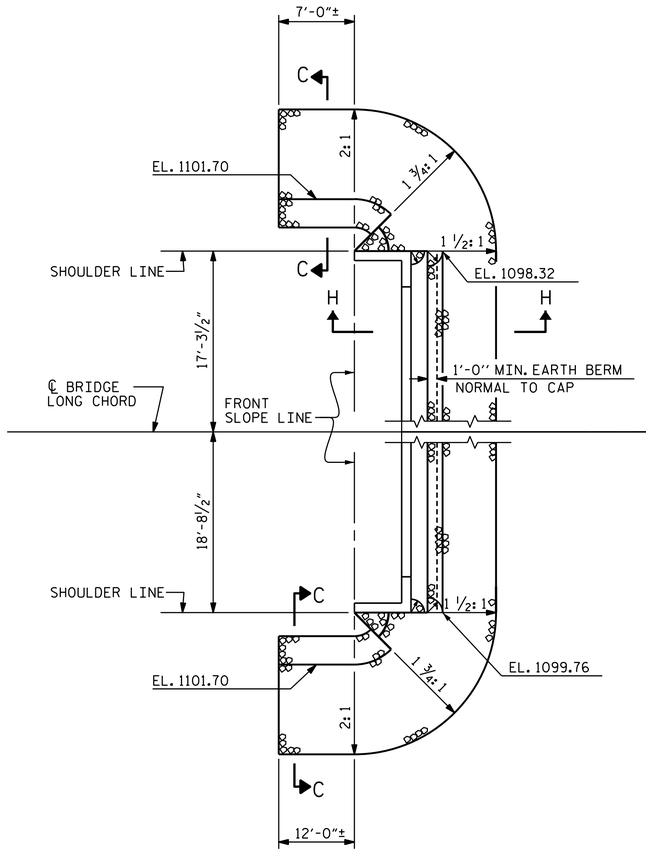

END BENT 1

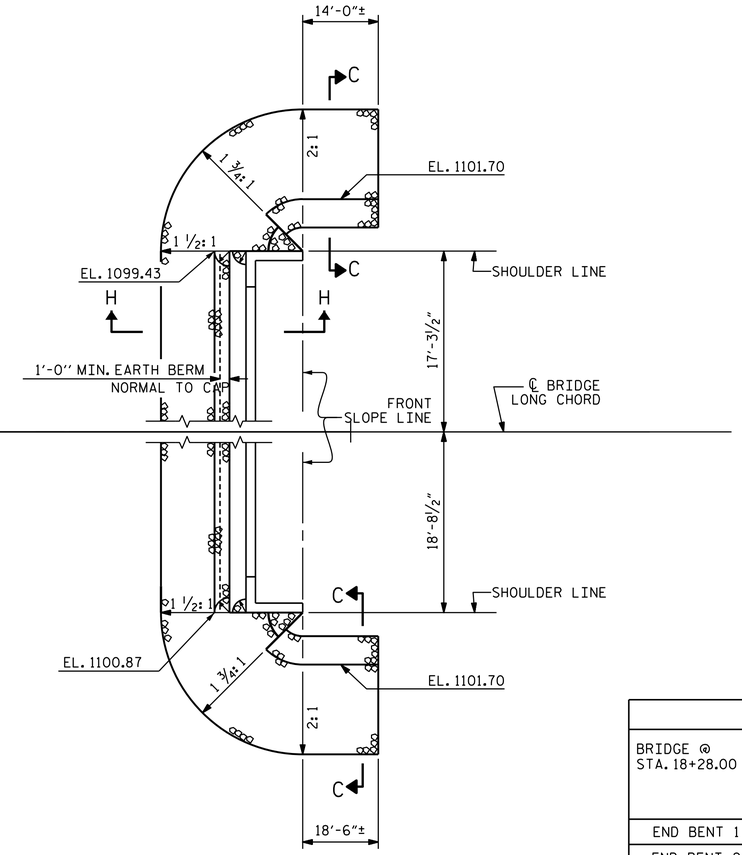

END BENT 2

NOTES :

FOR BERM WIDTH DIMENSIONS, SEE GENERAL DRAWING.

BANK STABILIZATION NOT SHOWN. SEE ROADWAY PLANS FOR DETAIL AND PAY ITEM.

ESTIMATED QUANTITIES		
BRIDGE @ STA. 18+28.00 -L-	RIP RAP CLASS II (2'-0" THICK)	GEOTEXTILE FOR DRAINAGE
	TONS	SQUARE YARDS
END BENT 1	80	90
END BENT 2	67	72

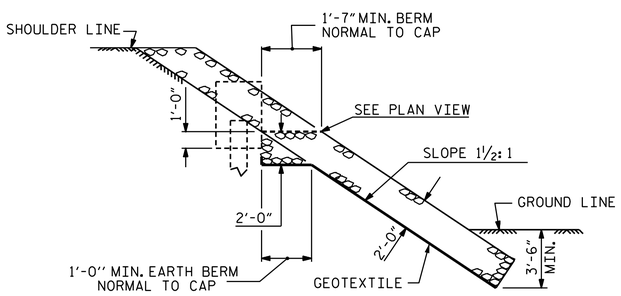

SECTION H-H

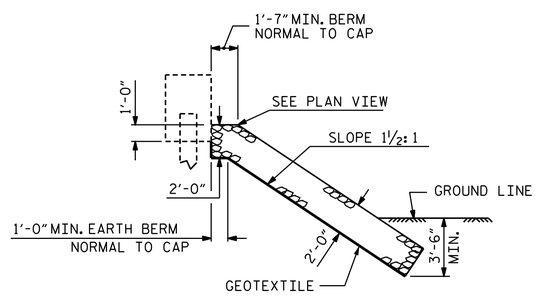

℄ SECTION
BERM RIP RAPPED

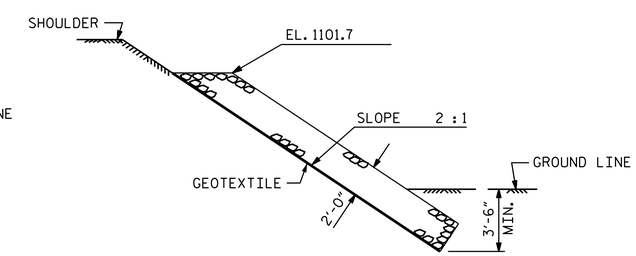

SECTION C-C

PROJECT NO. BR-0108

WILKES COUNTY

STATION: 18+28.00 -L-

STATE OF NORTH CAROLINA
DEPARTMENT OF TRANSPORTATION
RALEIGH

STANDARD

RIP RAP DETAILS

ms consultants, inc.
5444 Wade Park Blvd.
Suite 160
Raleigh, NC 27607
NC License Number : C-3239

NORTH CAROLINA PROFESSIONAL SEAL 037903 ENGINEER JEFFREY M KEPICH

Jeffrey Kepich 5/18/2021

DOCUMENT NOT CONSIDERED FINAL UNLESS ALL SIGNATURES COMPLETED

REVISIONS								SHEET NO.
NO.	BY:	DATE:	NO.	BY:	DATE:			S-13
1			3					TOTAL SHEETS
2			4					14

ASSEMBLED BY : J.M. KEPICH DATE : 12/20
CHECKED BY : L.M. SAMPLES DATE : 04/21

DRAWN BY : REK 1/84
CHECKED BY : RDU 1/84

REV. 10/1/11 MAA/GM
REV. 12/21/11 MAA/GM
REV. 12/17 MAA/THC

$$$$$$SYSTIME$$$$$$
$$$$$$$$$$$$$$$$$$DGN$$$$$$$$$$$$$$$$$$$$
$$$$USERNAME$$$$

STD. NO. RR1 (Sht 2)

DocuSign Envelope ID: 292C79D9-224C-4D38-B301-3E8F8C081A38

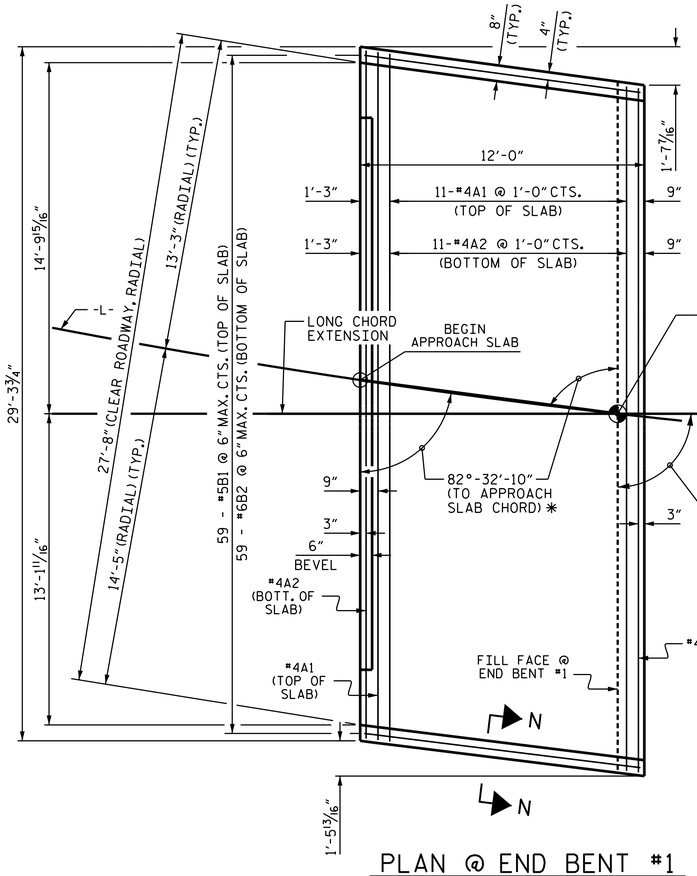

PLAN @ END BENT #1

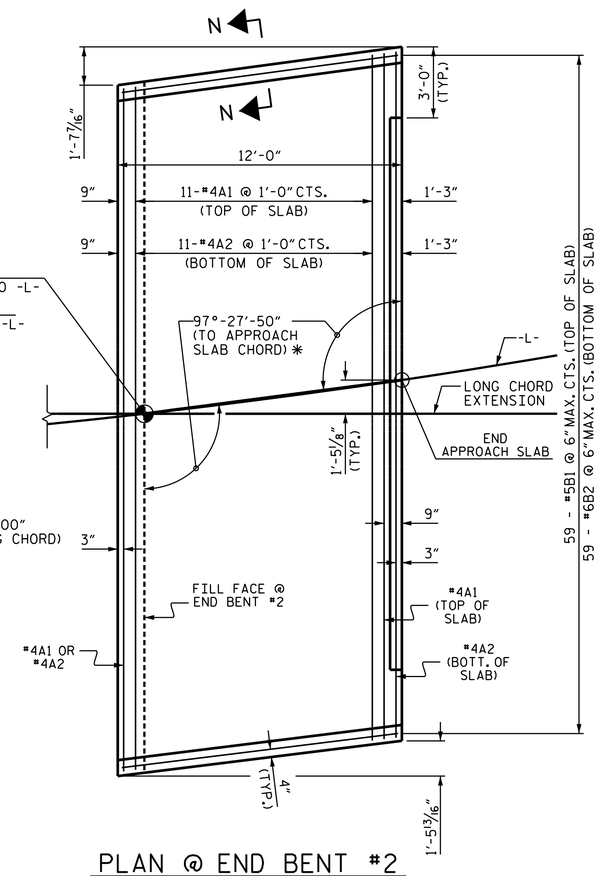

PLAN @ END BENT #2

DIMENSIONS SHOWN ARE TYPICAL FOR BOTH APPROACH SLABS

✱ THE APPROACH SLAB CHORD EXTENDS FROM THE WORK POINT TO THE BEGIN/END OF APPROACH SLAB AT EACH END BENT.

NOTES

FOR BRIDGE APPROACH FILL INCLUDING GEOTEXTILE, 4" Ø DRAINAGE PIPE, AND SELECT MATERIAL BACKFILL, SEE ROADWAY PLANS.

GEOTEXTILE SHALL BE TYPE 1 IN ACCORDANCE WITH THE STANDARD SPECIFICATIONS SECTION 1056.

SELECT MATERIAL BACKFILL (CLASS V OR CLASS VI) SHALL BE IN ACCORDANCE WITH STANDARD SPECIFICATIONS SECTION 1016.

SELECT MATERIAL BACKFILL IS TO BE CONTINUOUS ALONG FILL FACE OF BACKWALL FROM OUTSIDE EDGE TO OUTSIDE EDGE OF APPROACH SLAB.

FOR THE 4" Ø DRAINAGE PIPE OUTLET(S), SEE ROADWAY STANDARD DRAWINGS.

AREA BETWEEN THE WINGWALL AND APPROACH SLAB SHALL BE GRADED TO DRAIN THE WATER AWAY FROM THE FILL FACE OF THE BRIDGE AND SHALL BE PAVED. SEE ROADWAY PLANS.

APPROACH SLAB GROOVING IS NOT REQUIRED.

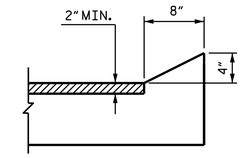

SECTION N-N

BILL OF MATERIAL

APPROACH SLAB AT EB #1

BAR	NO.	SIZE	TYPE	LENGTH	WEIGHT
✱ A1	13	#4	STR	28'-10"	251
A2	13	#4	STR	28'-10"	251
✱ B1	59	#5	STR	11'-1"	682
B2	59	#6	STR	11'-7"	1027
REINFORCING STEEL				LBS.	1278
✱ EPOXY COATED REINFORCING STEEL				LBS.	933
CLASS AA CONCRETE				C. Y.	17.5

APPROACH SLAB AT EB #2

BAR	NO.	SIZE	TYPE	LENGTH	WEIGHT
✱ A1	13	#4	STR	28'-10"	251
A2	13	#4	STR	28'-10"	251
✱ B1	59	#5	STR	11'-1"	682
B2	59	#6	STR	11'-7"	1027
REINFORCING STEEL				LBS.	1278
✱ EPOXY COATED REINFORCING STEEL				LBS.	933
CLASS AA CONCRETE				C. Y.	17.5

CURB DETAILS

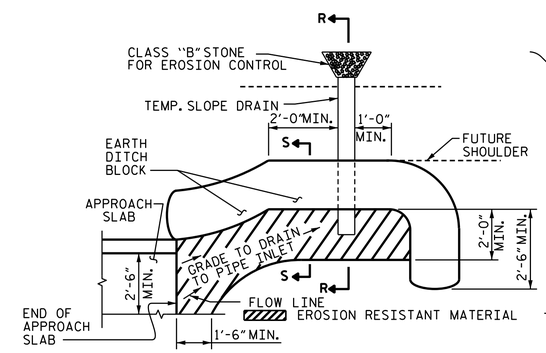

NOTE: IMMEDIATELY AFTER THE CONSTRUCTION OF THE APPROACH SLAB, THE CONTRACTOR SHALL PROVIDE TEMPORARY BERM AND SLOPE DRAIN. CONTRACTOR SHALL GRADE TO PIPE INLET AND PROVIDE EROSION RESISTANT MATERIAL AS SHOWN. THE EROSION RESISTANT MATERIAL SHALL BE EITHER 1) ASPHALT PLANT MIX, TYPE 1 OR TYPE 2, MIN. 2" DEPTH, 2) EROSION CONTROL MAT, OR 3) CONCRETE, AS DIRECTED BY THE ENGINEER. THE SLOPE DRAIN SHALL CONSIST OF A NON-PERFORATED TEMPORARY DRAINAGE PIPE, 12 INCHES IN DIAMETER.

PLAN VIEW

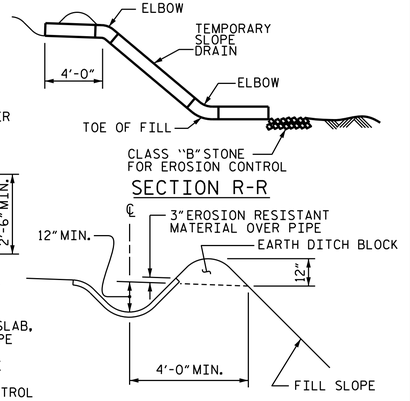

SECTION S-S

TEMPORARY BERM AND SLOPE DRAIN DETAILS

(TO BE USED WHEN SHOULDER BERM GUTTER IS REQUIRED)

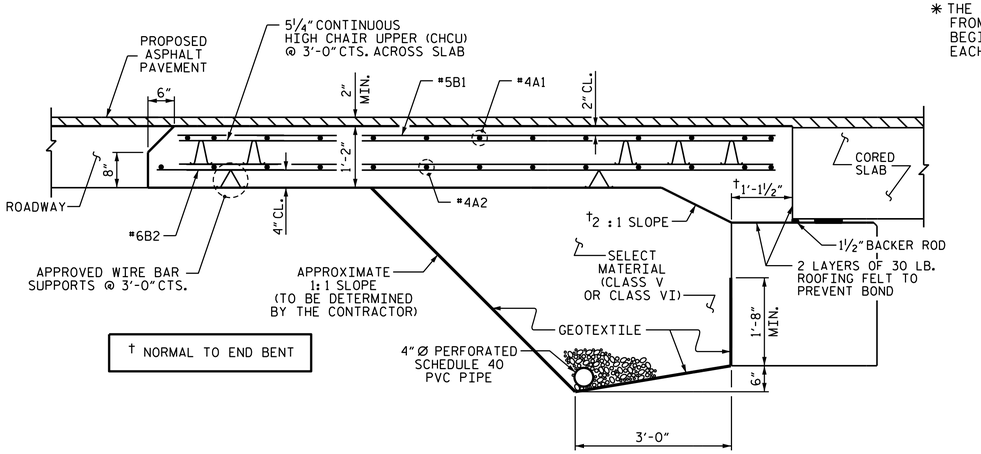

† NORMAL TO END BENT

SECTION THRU SLAB

(TYPE II - MODIFIED APPROACH FILL)

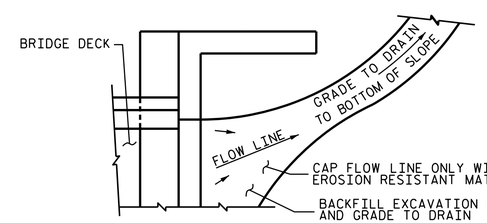

NOTE: IF THE APPROACH SLAB IS NOT CONSTRUCTED IMMEDIATELY AFTER THE BACKFILLING OF THE END BENT EXCAVATION, GRADE TO DRAIN TO THE BOTTOM OF THE SLOPE AND PROVIDE EROSION RESISTANT MATERIAL, SUCH AS FIBERGLASS ROVING OR AS DIRECTED BY THE ENGINEER TO PREVENT SOIL EROSION AND TO PROTECT THE AREA ADJACENT TO THE STRUCTURE. THE CONTRACTOR WILL BE REQUIRED TO REMOVE THESE MATERIALS PRIOR TO CONSTRUCTION OF THE APPROACH SLAB.

TEMPORARY DRAINAGE DETAIL

SPLICE LENGTHS

BAR SIZE	EPOXY COATED	UNCOATED
#4	2'-0"	1'-9"
#5	2'-6"	2'-2"
#6	3'-10"	2'-7"

PROJECT NO. BR-0108

WILKES COUNTY

STATION: 18+28.00 -L-

STATE OF NORTH CAROLINA
DEPARTMENT OF TRANSPORTATION
RALEIGH

BRIDGE APPROACH SLAB FOR PRESTRESSED CONCRETE CORED SLAB UNIT (SUB-REGIONAL TIER)

ms consultants, inc.
5444 Wade Park Blvd.
Suite 160
Raleigh, NC 27607
NC License Number : C-3239

NORTH CAROLINA PROFESSIONAL SEAL 037903 ENGINEER JEFFREY M. KEPICH

DocuSign Jeffrey Kepich 5/18/2021

DOCUMENT NOT CONSIDERED FINAL UNLESS ALL SIGNATURES COMPLETED

REVISIONS							
NO.	BY:	DATE:	NO.	BY:	DATE:		
1			3				
2			4				

SHEET NO. S-14

TOTAL SHEETS 14

DRAWN BY :	J.M. KEPICH	DATE :	03/21
CHECKED BY :	L.M. SAMPLES	DATE :	04/21
DESIGN ENGINEER OF RECORD :	J.M. KEPICH	DATE :	05/21

$$$$$$$SYSTIME$$$$$
$$$$$$$$$$$$$$$$$$DGN$$$$$$$$$$$$$$$$$$$$
$$$$USERNAME$$$$

STANDARD NOTES

DESIGN DATA:

SPECIFICATIONS	A.A.S.H.T.O. (CURRENT)
LIVE LOAD	SEE PLANS
IMPACT ALLOWANCE	SEE A.A.S.H.T.O.
STRESS IN EXTREME FIBER OF STRUCTURAL STEEL - AASHTO M270 GRADE 36	20,000 LBS. PER SQ. IN.
- AASHTO M270 GRADE 50W	27,000 LBS. PER SQ. IN.
- AASHTO M270 GRADE 50	27,000 LBS. PER SQ. IN.
REINFORCING STEEL IN TENSION - GRADE 60	24,000 LBS. PER SQ. IN.
CONCRETE IN COMPRESSION	1,200 LBS. PER SQ. IN.
CONCRETE IN SHEAR	SEE A.A.S.H.T.O.
STRUCTURAL TIMBER - TREATED OR UNTREATED EXTREME FIBER STRESS	1,800 LBS. PER SQ. IN.
COMPRESSION PERPENDICULAR TO GRAIN OF TIMBER	375 LBS. PER SQ. IN.
EQUIVALENT FLUID PRESSURE OF EARTH	30 LBS. PER CU. FT. (MINIMUM)

MATERIAL AND WORKMANSHIP:

EXCEPT AS MAY OTHERWISE BE SPECIFIED ON PLANS OR IN THE SPECIAL PROVISIONS, ALL MATERIAL AND WORKMANSHIP SHALL BE IN ACCORDANCE WITH THE 2018 "STANDARD SPECIFICATIONS FOR ROADS AND STRUCTURES" OF THE N. C. DEPARTMENT OF TRANSPORTATION.

STEEL SHEET PILING FOR PERMANENT OR TEMPORARY APPLICATIONS SHALL BE HOT ROLLED.

CONCRETE:

UNLESS OTHERWISE REQUIRED ON PLANS, CLASS A CONCRETE SHALL BE USED FOR ALL PORTIONS OF ALL STRUCTURES WITH THE EXCEPTION THAT: CLASS AA CONCRETE SHALL BE USED IN BRIDGE SUPERSTRUCTURES, ABUTMENT BACKWALLS, AND APPROACH SLABS; AND CLASS B CONCRETE SHALL BE USED FOR SLOPE PROTECTION AND RIP RAP.

CONCRETE CHAMFERS:

UNLESS OTHERWISE NOTED ON THE PLANS, ALL EXPOSED CORNERS ON STRUCTURES SHALL BE CHAMFERED 3/4" WITH THE FOLLOWING EXCEPTIONS: TOP CORNERS OF CURBS MAY BE ROUNDED TO 1 1/2" RADIUS WHICH IS BUILT INTO CURB FORMS; CORNERS OF TRANSVERSE FLOOR EXPANSION JOINTS SHALL BE ROUNDED WITH A 1/4" FINISHING TOOL UNLESS OTHERWISE REQUIRED ON PLANS; AND CORNERS OF EXPANSION JOINTS IN THE ROADWAY FACES AND TOPS OF CURBS AND SIDEWALKS SHALL BE ROUNDED TO A 1/4" RADIUS WITH A FINISHING STONE OR TOOL UNLESS OTHERWISE REQUIRED ON PLANS.

DOWELS:

DOWELS WHEN INDICATED ON PLANS AS FOR CULVERT EXTENSIONS, SHALL BE EMBEDDED AT LEAST 12" INTO THE OLD CONCRETE AND GROUTED INTO PLACE WITH 1:2 CEMENT MORTAR.

ALLOWANCE FOR DEAD LOAD DEFLECTION, SETTLEMENT, ETC. IN CASTING SUPERSTRUCTURES:

BRIDGES SHALL BE BUILT ON THE GRADE OR VERTICAL CURVE SHOWN ON PLANS. SLABS, CURBS AND PARAPETS SHALL CONFORM TO THE GRADE OR CURVE.

ALL DIMENSIONS WHICH ARE GIVEN IN SECTION AND ARE AFFECTED BY DEAD LOAD DEFLECTIONS ARE DIMENSIONS AT CENTER LINE OF BEARING UNLESS OTHERWISE NOTED ON PLANS. IN SETTING FORMS FOR STEEL BEAM BRIDGES AND PRESTRESSED CONCRETE GIRDER BRIDGES, ADJUSTMENTS SHALL BE MADE DUE TO THE DEAD LOAD DEFLECTIONS FOR THE ELEVATIONS SHOWN. WHERE BLOCKS ARE SHOWN OVER BEAMS FOR BUILDING UP TO THE SLAB, THE VERTICAL DIMENSIONS OF THE BLOCKS SHALL BE ADJUSTED BETWEEN BEARINGS TO COMPENSATE FOR DEAD LOAD DEFLECTIONS, VERTICAL CURVE ORDINATE, AND ACTUAL BEAM CAMBER. WHERE BOTTOM OF SLAB IS IN LINE WITH BOTTOM OF TOP FLANGES, DEPTH OF SLAB BETWEEN BEARINGS SHALL BE ADJUSTED TO COMPENSATE FOR DEAD LOAD DEFLECTION, VERTICAL CURVE ORDINATE, AND ACTUAL BEAM CAMBER.

IN SETTING FALSEWORK AND FORMS FOR REINFORCED CONCRETE SPANS, AN ALLOWANCE SHALL BE MADE FOR DEAD LOAD DEFLECTIONS, SETTLEMENT OF FALSEWORK, AND PERMANENT CAMBER WHICH SHALL BE PROVIDED FOR IN ADDITION TO THE ELEVATIONS SHOWN. AFTER REMOVAL OF THE FALSEWORK, THE FINISHED STRUCTURES SHALL CONFORM TO THE PROFILE AND ELEVATIONS SHOWN ON THE PLANS AND CONSTRUCTION ELEVATIONS FURNISHED BY THE ENGINEER.

DETAILED DRAWINGS FOR FALSEWORK OR FORMS FOR BRIDGE SUPERSTRUCTURE AND ANY STRUCTURE OR PARTS OF A STRUCTURE AS NOTED ON THE PLANS SHALL BE SUBMITTED TO THE ENGINEER FOR APPROVAL BEFORE CONSTRUCTION OF THE FALSEWORK OR FORMS IS STARTED.

REINFORCING STEEL:

ALL REINFORCING STEEL SHALL BE DEFORMED. DIMENSIONS RELATIVE TO PLACEMENT OF REINFORCING ARE TO CENTERS OF BARS UNLESS OTHERWISE INDICATED IN THE PLANS. DIMENSIONS ON BAR DETAILS ARE TO CENTERS OF BARS OR ARE OUT TO OUT AS INDICATED ON PLANS.

WIRE BAR SUPPORTS SHALL BE PROVIDED FOR REINFORCING STEEL WHERE INDICATED ON THE PLANS. WHEN BAR SUPPORT PIECES ARE PLACED IN CONTINUOUS LINES, THEY SHALL BE SO PLACED THAT THE ENDS OF THE SUPPORTING WIRES SHALL BE LAPPED TO LOCK LEGS ON ADJOINING PIECES.

STRUCTURAL STEEL:

AT THE CONTRACTOR'S OPTION, HE MAY SUBSTITUTE 7/8" Ø SHEAR STUDS FOR THE 3/4" Ø STUDS SPECIFIED ON THE PLANS. THIS SUBSTITUTION SHALL BE MADE AT THE RATE OF 3 - 7/8" Ø STUDS FOR 4 - 3/4" Ø STUDS, AND STUD SPACING CHANGES SHALL BE MADE AS NECESSARY TO PROVIDE THE SAME EQUIVALENT NUMBER OF 7/8" Ø STUDS ALONG THE BEAM AS SHOWN FOR 3/4" Ø STUDS BASED ON THE RATIO OF 3 - 7/8" Ø STUDS FOR 4 - 3/4" Ø STUDS. STUDS OF THE LENGTH SPECIFIED ON THE PLANS MUST BE PROVIDED. THE MAXIMUM SPACING SHALL BE 2'-0".

EXCEPT AT THE INTERIOR SUPPORTS OF CONTINUOUS BEAMS WHERE THE COVER PLATE IS IN CONTACT WITH BEARING PLATE, THE CONTRACTOR MAY, AT HIS OPTION, SUBSTITUTE FOR THE COVER PLATES DESIGNATED ON THE PLANS COVER PLATES OF THE EQUIVALENT AREA PROVIDED THESE PLATES ARE AT LEAST 5/16" IN THICKNESS AND DO NOT EXCEED A WIDTH EQUAL TO THE FLANGE WIDTH LESS 2" OR A THICKNESS EQUAL TO 2 TIMES THE FLANGE THICKNESS. THE SIZE OF FILLET WELDS SHALL CONFORM TO THE REQUIREMENTS OF THE CURRENT ANSI/AASHTO/AWS "BRIDGE WELDING CODE". ELECTROSLAG WELDING WILL NOT BE PERMITTED.

WITH THE SOLE EXCEPTION OF EDGES AT SURFACES WHICH BEAR ON OTHER SURFACES, ALL SHARP EDGES AND ENDS OF SHAPES AND PLATES SHALL BE SLIGHTLY ROUNDED BY SUITABLE MEANS TO A RADIUS OF APPROXIMATELY 1/16 INCH OR EQUIVALENT FLAT SURFACE AT A SUITABLE ANGLE PRIOR TO PAINTING, GALVANIZING, OR METALLIZING.

HANDRAILS AND POSTS:

METAL STANDARDS AND FACES OF THE CONCRETE END POSTS FOR THE METAL RAIL SHALL BE SET NORMAL TO THE GRADE OF THE CURB, UNLESS OTHERWISE SHOWN ON PLANS. THE METAL RAIL AND TOPS OF CONCRETE POSTS USED WITH THE ALUMINUM RAIL SHALL BE BUILT PARALLEL TO THE GRADE OF THE CURB.

METAL HANDRAILS SHALL BE IN ACCORDANCE WITH THE PLANS. RAILS SHALL BE AS MANUFACTURED FOR BRIDGE RAILING. CASTINGS SHALL BE OF A UNIFORM APPEARANCE. FINS AND OTHER DEFORMATIONS RESULTING FROM CASTING OR OTHERWISE SHALL BE REMOVED IN A MANNER SO THAT A UNIFORM COLORING OF THE COMPLETED CASTING SHALL BE OBTAINED. CASTINGS WITH DISCOLORATIONS OR OF NON-UNIFORM COLORING WILL NOT BE ACCEPTED. CERTIFIED MILL REPORTS ARE REQUIRED FOR METAL RAILS AND POSTS.

SPECIAL NOTES:

GENERALLY, IN CASE OF DISCREPANCY, THIS STANDARD SHEET OF NOTES SHALL GOVERN OVER THE SPECIFICATIONS, BUT THE REMAINDER OF THE PLANS SHALL GOVERN OVER NOTES HEREON, AND SPECIAL PROVISIONS SHALL GOVERN OVER ALL. SEE SPECIFICATIONS ARTICLE 105-4.

ENGLISH

JANUARY, 1990