DocuSign Envelope ID: C2C1A29C-227F-4A8A-A531-41AC24DC46B0

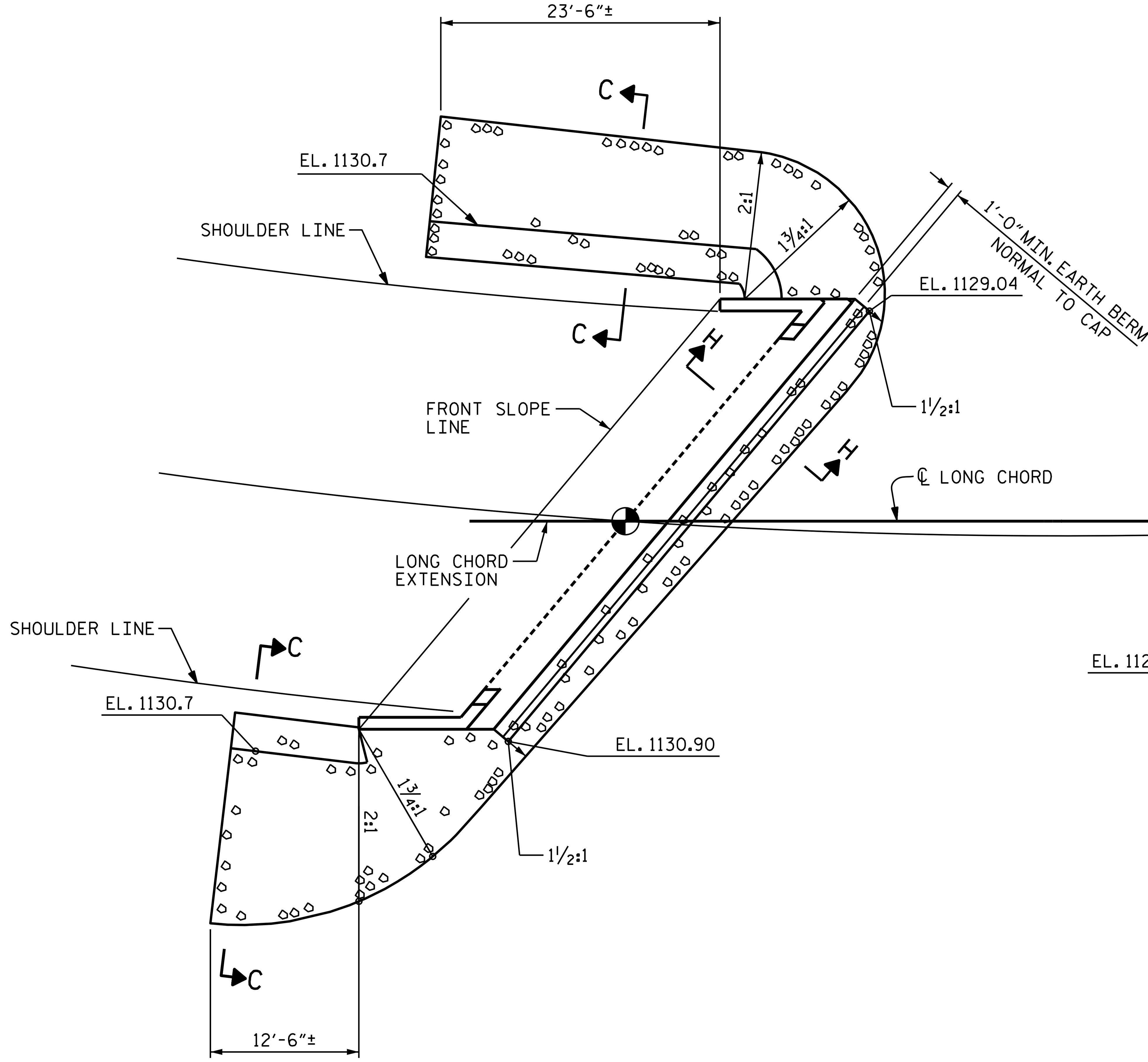

END BENT #1

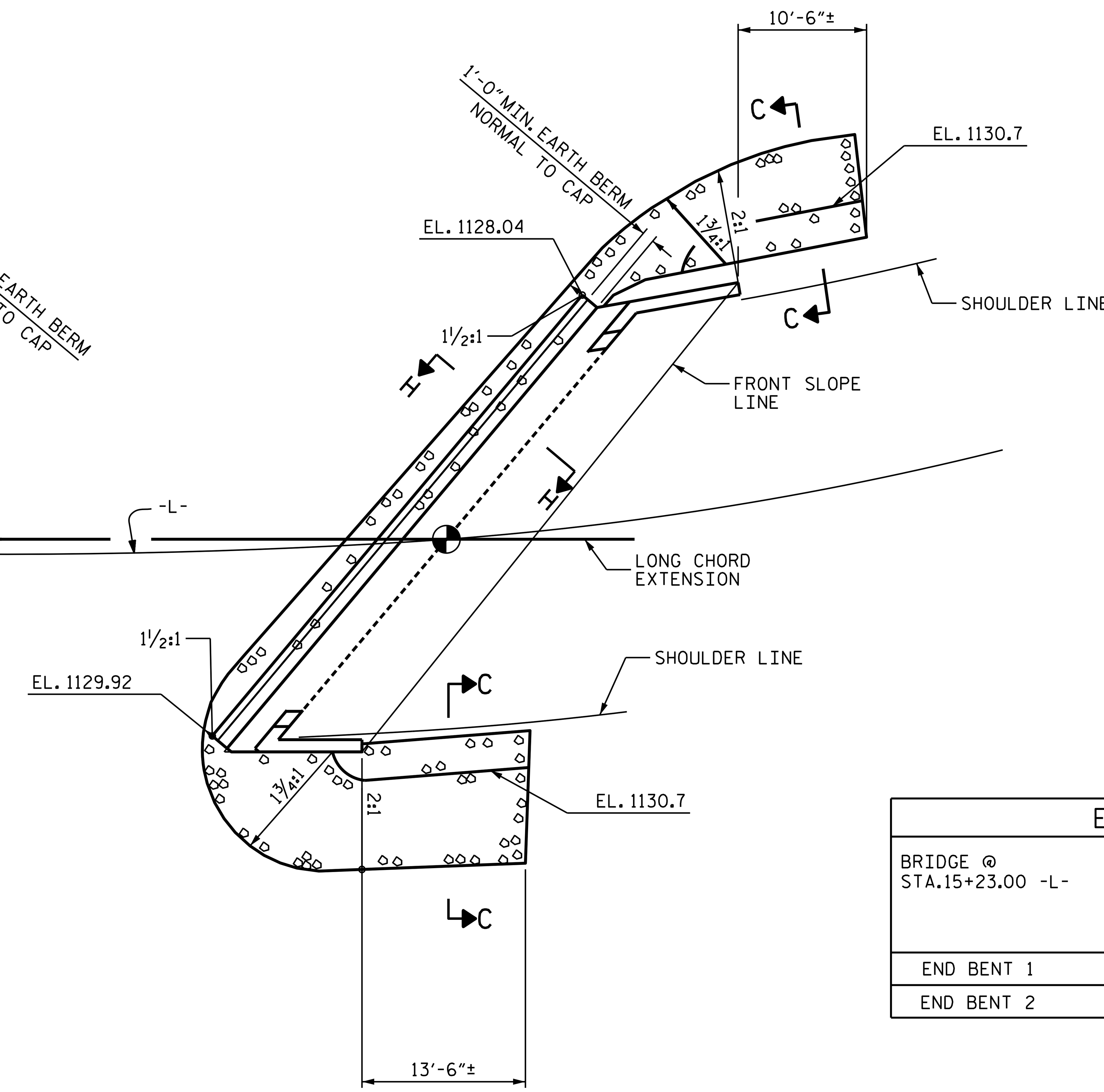

END BENT #2

ESTIMATED QUANTITIES

BRIDGE @ STA.15+23.00 -L-	RIP RAP CLASS II (2'-0" THICK)	GEOTEXTILE FOR DRAINAGE
	TONS	SQUARE YARDS
END BENT 1	97	109
END BENT 2	61	69

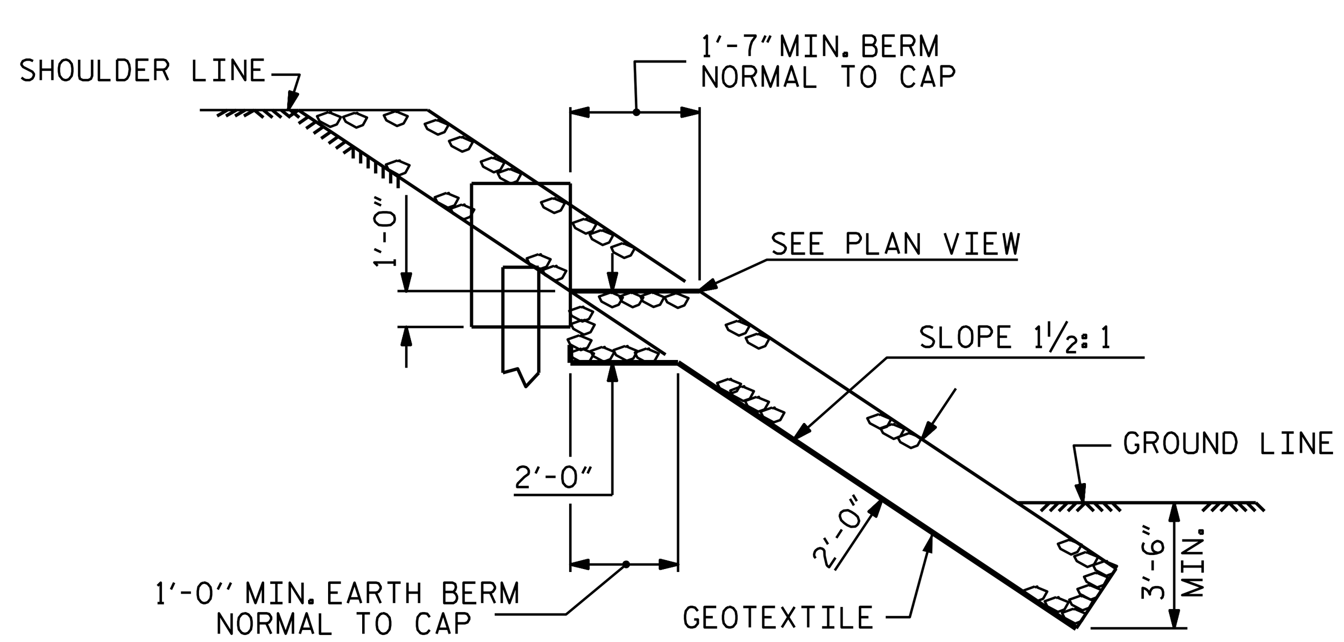

SECTION H-H

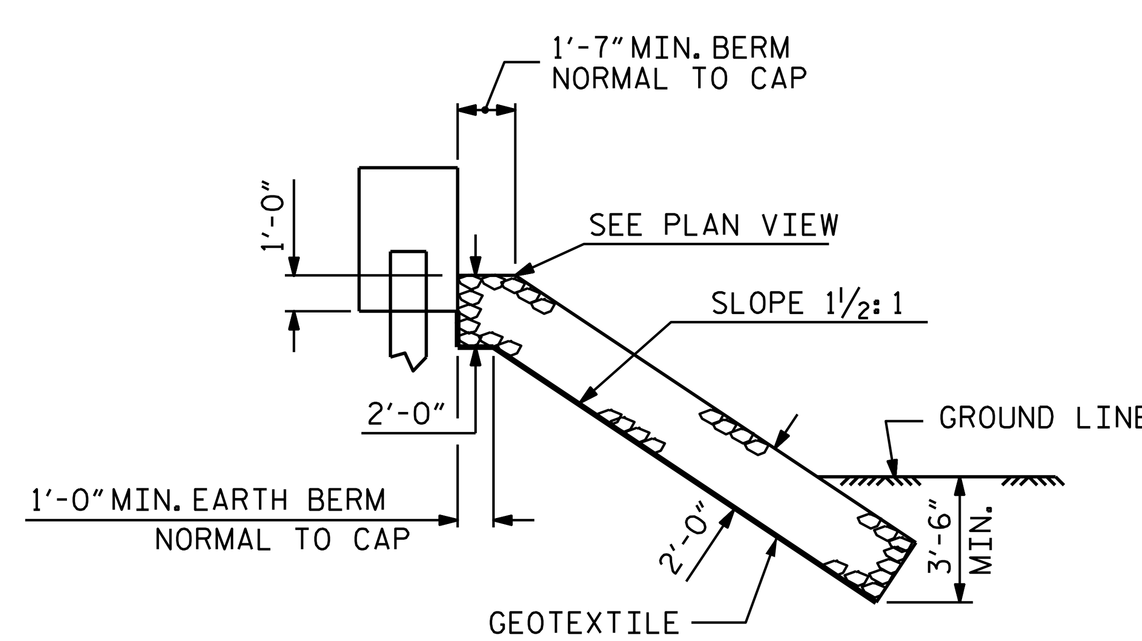

℄ SECTION
BERM RIP RAPPED

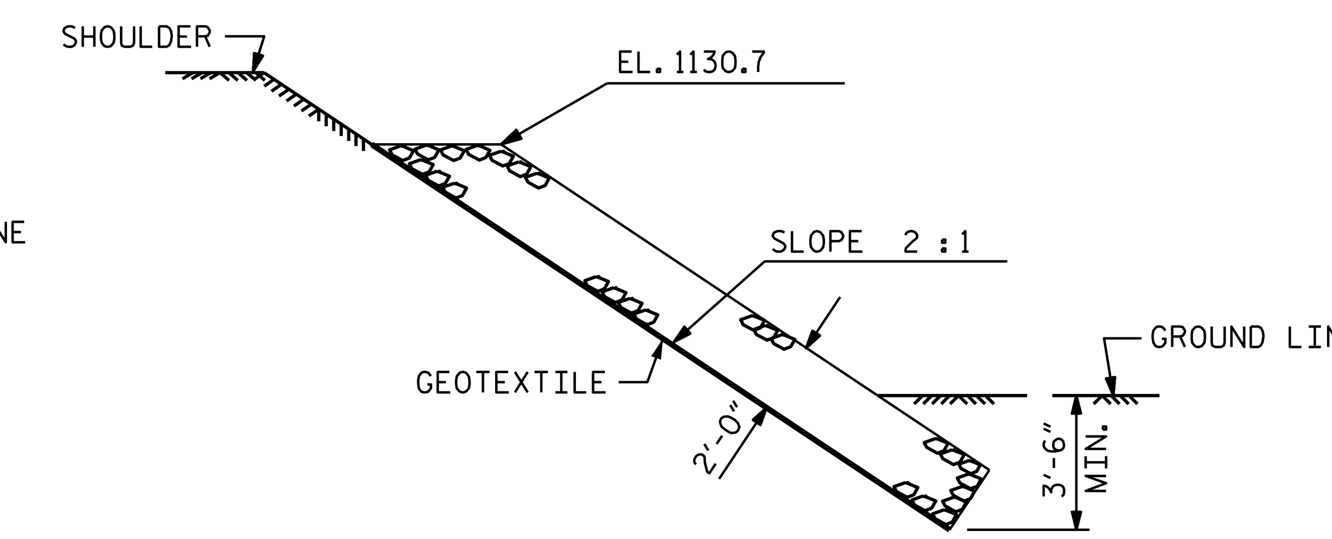

SECTION C-C

PROJECT NO. 17BP.11.R.153
WILKES COUNTY
STATION: 15+23.00 -L-

STATE OF NORTH CAROLINA
DEPARTMENT OF TRANSPORTATION
RALEIGH

STANDARD

RIP RAP DETAILS

ms consultants, inc.
5444 Wade Park Blvd.
Suite 160
Raleigh, NC 27607
NC License Number : C-3239

NORTH CAROLINA PROFESSIONAL SEAL 037903 ENGINEER JEFFREY M KEPICH

DocuSigned by: Jeffrey Kepich 5/26/2021

DOCUMENT NOT CONSIDERED FINAL UNLESS ALL SIGNATURES COMPLETED

REVISIONS					
NO.	BY:	DATE:	NO.	BY:	DATE:
1			3		
2			4		

SHEET NO. S-14
TOTAL SHEETS 16

DRAWN BY : J.M. KEPICH DATE : 02/21
CHECKED BY : L.M. SAMPLES DATE : 05/21
DESIGN ENGINEER OF RECORD : J.M. KEPICH DATE : 05/21

$$$$$$SYSTIME$$$$$
$$$$$$$$$$$$$$$DGN$$$$$$$$$$$$$$$$
$$$$USERNAME$$$$