DocuSign Envelope ID: C2C1A29C-227F-4A8A-A531-41AC24DC46B0

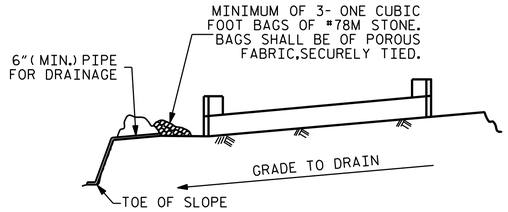

BAGGED STONE AND PIPE SHALL BE PLACED IMMEDIATELY AFTER COMPLETION OF END BENT EXCAVATION. PIPE MAY BE EITHER CONCRETE, CORRUGATED STEEL, CORRUGATED ALUMINUM ALLOY, OR CORRUGATED PLASTIC. PERFORATED PIPE WILL NOT BE ALLOWED.

BAGGED STONE SHALL REMAIN IN PLACE UNTIL THE ENGINEER DIRECTS THAT IT BE REMOVED. THE CONTRACTOR SHALL REMOVE AND DISPOSE OF SILT ACCUMULATIONS AT BAGGED STONE WHEN SO DIRECTED BY THE ENGINEER. BAGS SHALL BE REMOVED AND REPLACED WHENEVER THE ENGINEER DETERMINES THAT THEY HAVE DETERIORATED AND LOST THEIR EFFECTIVENESS.

NO SEPARATE PAYMENT WILL BE MADE FOR THIS WORK AND THE ENTIRE COST OF THIS WORK SHALL BE INCLUDED IN THE UNIT CONTRACT PRICE BID FOR THE SEVERAL PAY ITEMS.

TEMPORARY DRAINAGE AT END BENT

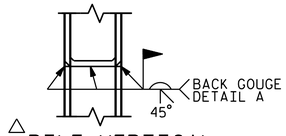

△ PILE VERTICAL

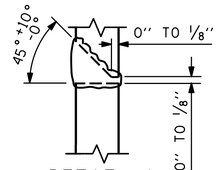

DETAIL A

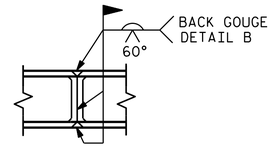

△ PILE HORIZONTAL OR VERTICAL

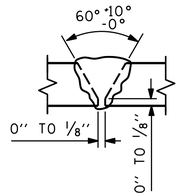

DETAIL B

△ POSITION OF PILE DURING WELDING.

PILE SPLICE DETAILS

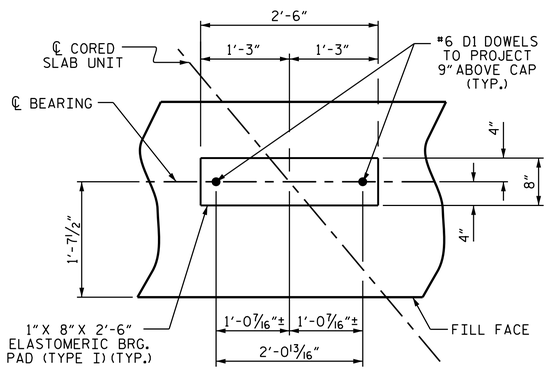

DETAIL "A"

(END BENT No. 1 SHOWN, END BENT No. 2 SIMILAR BY ROTATION)

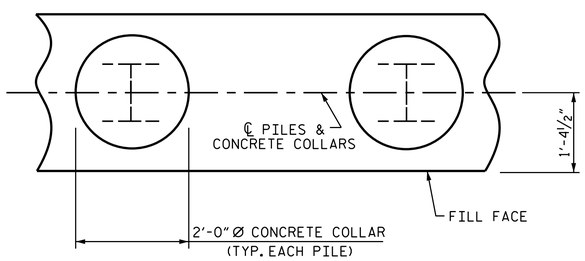

PLAN

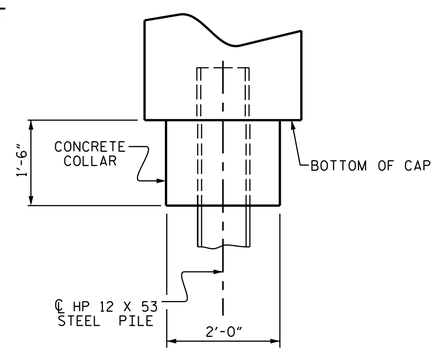

ELEVATION

CORROSION PROTECTION FOR STEEL PILES DETAIL

(END BENT No. 1 SHOWN, END BENT No. 2 SIMILAR BY ROTATION)

BAR TYPES

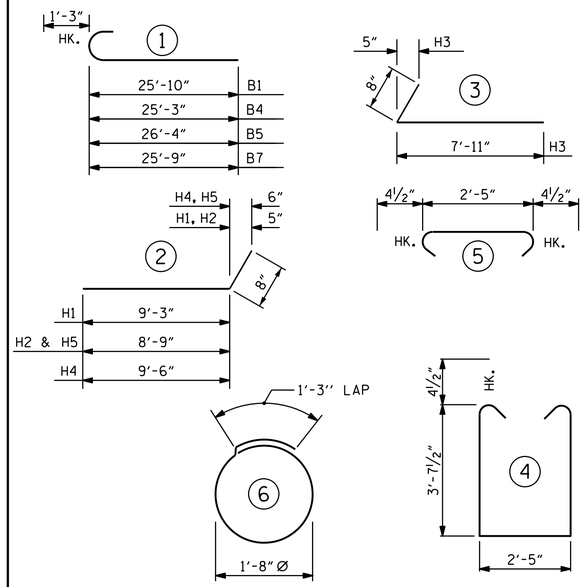

ALL BAR DIMENSIONS ARE OUT TO OUT.

END BENT No. 1	END BENT No. 2
HP 12 X 53 STEEL PILES NO: 7 LIN. FT.= 140.0	HP 12 X 53 STEEL PILES NO: 7 LIN. FT.= 123.0
PILE DRIVING EQUIPMENT SETUP FOR HP 12 X 53 STEEL PILES NO: 7	PILE DRIVING EQUIPMENT SETUP FOR HP 12 X 53 STEEL PILES NO: 7

BILL OF MATERIAL FOR ONE END BENT #1

BAR	NO.	SIZE	TYPE	LENGTH	WEIGHT
B1	8	#9	1	27'-1"	737
B2	28	#4	STR	24'-7"	460
B3	12	#4	STR	2'-5"	20
B4	8	#9	1	26'-6"	721
D1	20	#6	STR	1'-6"	45
H1	10	#4	2	9'-11"	67
H2	10	#4	2	9'-5"	63
H3	20	#4	3	8'-7"	115
K1	16	#4	STR	3'-10"	41
S1	62	#4	4	10'-5"	432
S2	62	#4	5	3'-2"	131
S3	28	#4	6	6'-6"	122
V1	26	#4	STR	6'-6"	113
V2	27	#4	STR	6'-10"	123

REINFORCING STEEL (FOR END BENT #1) 3190 LBS.

CLASS A CONCRETE BREAKDOWN (FOR END BENT #1)

POUR #1 CAP, LOWER PART OF WINGS & COLLARS 21.4 C.Y.

POUR #2 UPPER PART OF WINGS 2.7 C.Y.

TOTAL CLASS A CONCRETE 24.1 C.Y.

BILL OF MATERIAL FOR ONE END BENT #2

BAR	NO.	SIZE	TYPE	LENGTH	WEIGHT
B3	12	#4	STR	2'-5"	20
B5	8	#9	1	27'-7"	751
B6	28	#4	STR	24'-10"	465
B7	8	#9	1	27'-0"	735
D1	20	#6	STR	1'-6"	45
H3	20	#4	3	8'-7"	115
H4	10	#4	2	10'-2"	68
H5	10	#4	2	9'-5"	63
K1	8	#4	STR	3'-3"	17
K2	8	#4	STR	4'-9"	25
S1	62	#4	4	10'-5"	432
S2	62	#4	5	3'-2"	131
S3	28	#4	6	6'-6"	122
V1	26	#4	STR	6'-6"	113
V2	29	#4	STR	6'-10"	132

REINFORCING STEEL (FOR END BENT #2) 3234 LBS.

CLASS A CONCRETE BREAKDOWN (FOR END BENT #2)

POUR #1 CAP, LOWER PART OF WINGS & COLLARS 21.8 C.Y.

POUR #2 UPPER PART OF WINGS 2.7 C.Y.

TOTAL CLASS A CONCRETE 24.5 C.Y.

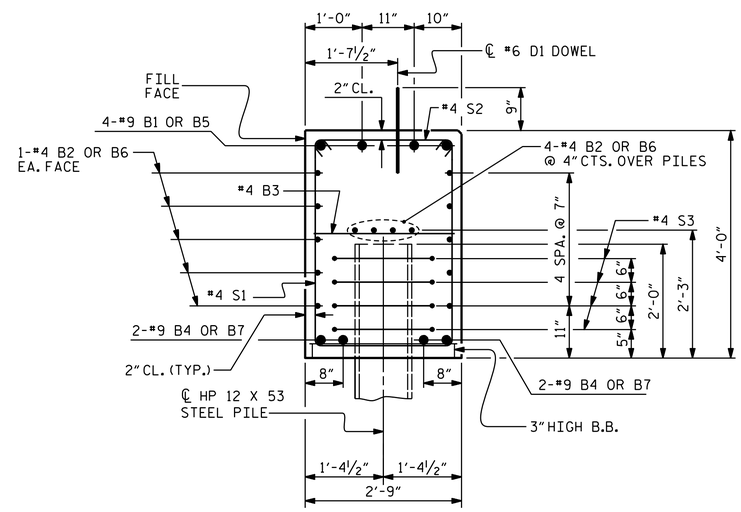

SECTION A-A

(CONCRETE COLLAR NOT SHOWN FOR CLARITY. SEE "CORROSION PROTECTION FOR STEEL PILES DETAIL.")

PROJECT NO. 17BP.11.R.153

WILKES COUNTY

STATION: 15+23.00 -L-

SHEET 5 of 5

STATE OF NORTH CAROLINA
DEPARTMENT OF TRANSPORTATION
RALEIGH

SUBSTRUCTURE

END BENT No. 1 & 2 DETAILS

ms consultants, inc.
5444 Wade Park Blvd.
Suite 160
Raleigh, NC 27607
NC License Number : C-3239

NORTH CAROLINA PROFESSIONAL SEAL 037903 ENGINEER JEFFREY M. KEPICH

DocuSigned by: Jeffrey Kepich 5/26/2021

DOCUMENT NOT CONSIDERED FINAL UNLESS ALL SIGNATURES COMPLETED

REVISIONS								SHEET NO.
NO.	BY:	DATE:	NO.	BY:	DATE:			S-13
1			3					TOTAL SHEETS
2			4					16

DRAWN BY :	J.M. KEPICH	DATE :	02/21
CHECKED BY :	L.M. SAMPLES	DATE :	05/21
DESIGN ENGINEER OF RECORD :	J.M. KEPICH	DATE :	05/21

$$$$$$$$SYSTIME$$$$$$
$$$$$$$$$$$$$$$$$$$$DGN$$$$$$$$$$$$$$$$$$$$
$$$$USERNAME$$$$