DocuSign Envelope ID: C2C1A29C-227F-4A8A-A531-41AC24DC46B0

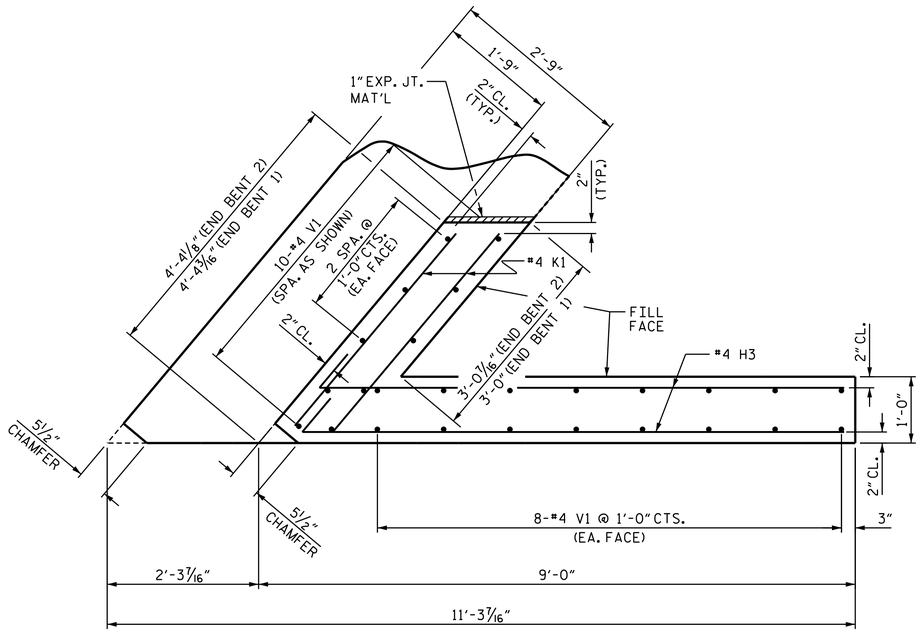

PLAN OF WING (W1)

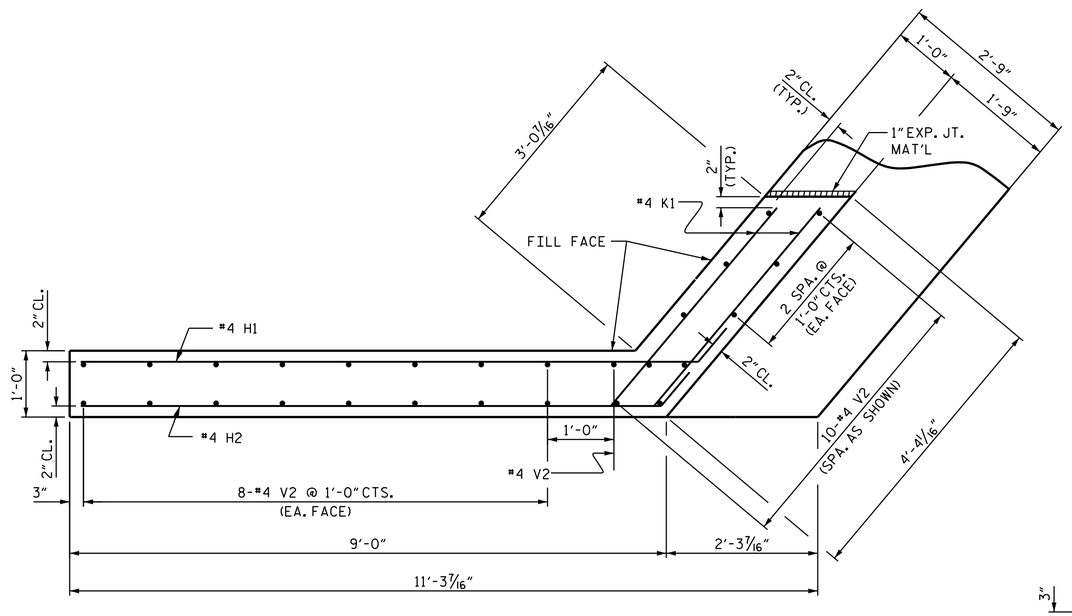

PLAN OF WING (W2)

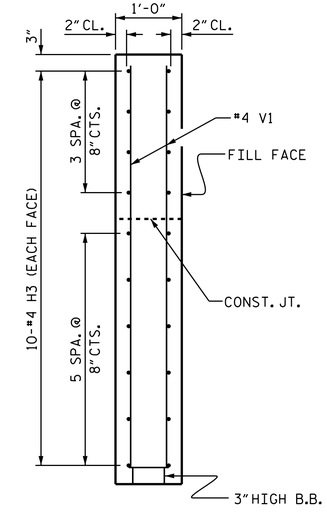

SECTION X-X

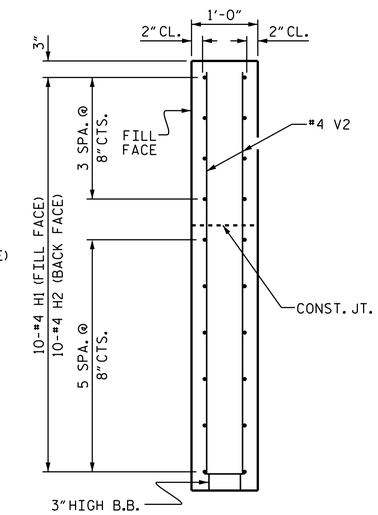

SECTION Y-Y

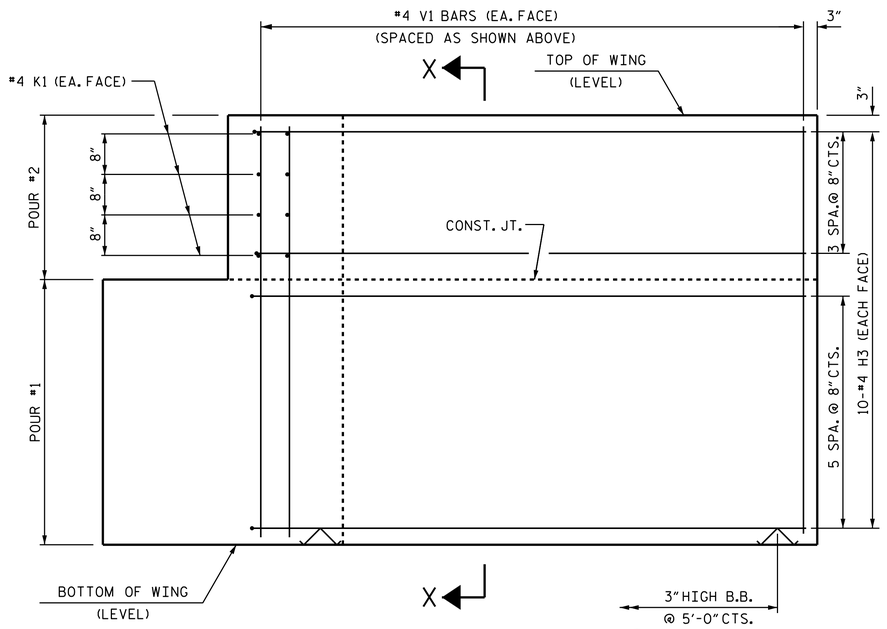

ELEVATION OF WING (W1)

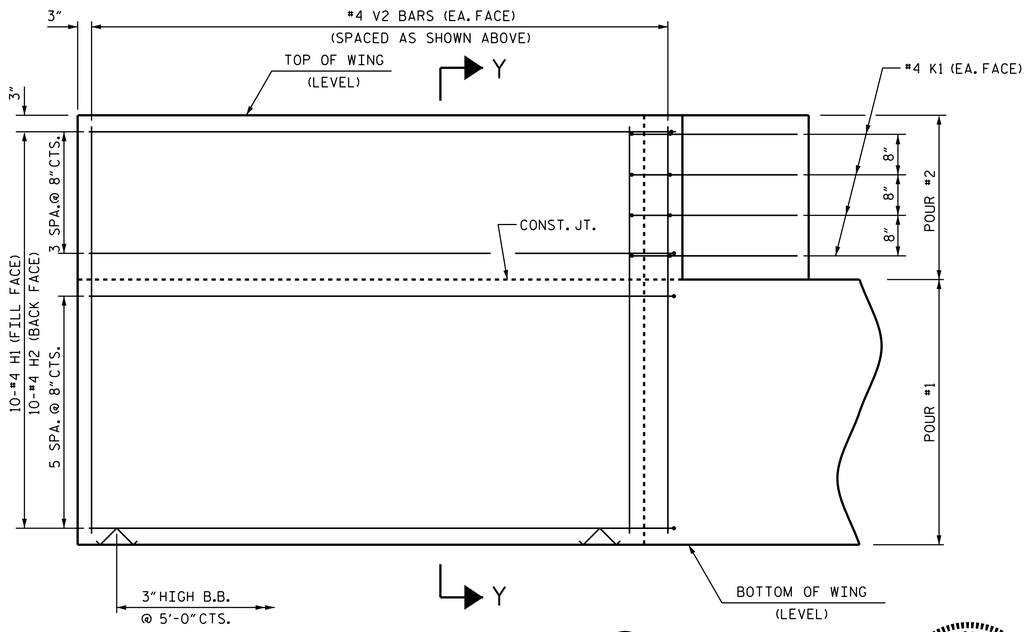

ELEVATION OF WING (W2)

WING DETAILS

PROJECT NO. 17BP.11.R.153

WILKES COUNTY

STATION: 15+23.00 -L-

SHEET 3 of 5

STATE OF NORTH CAROLINA
DEPARTMENT OF TRANSPORTATION
RALEIGH

SUBSTRUCTURE

END BENT
WING DETAILS

NORTH CAROLINA PROFESSIONAL SEAL 037903 ENGINEER JEFFREY M. KEPICH

DocuSigned by: Jeffrey Kepich 5/26/2021

DOCUMENT NOT CONSIDERED FINAL UNLESS ALL SIGNATURES COMPLETED

ms consultants, inc.
5444 Wade Park Blvd.
Suite 160
Raleigh, NC 27607
NC License Number : C-3239

REVISIONS						SHEET NO.
NO.	BY:	DATE:	NO.	BY:	DATE:	S-11
1			3			TOTAL SHEETS
2			4			16

DRAWN BY : J.M. KEPICH DATE : 02/21
CHECKED BY : L.M. SAMPLES DATE : 05/21
DESIGN ENGINEER OF RECORD : J.M. KEPICH DATE : 05/21

$$$$$$SYSTIME$$$$$$
$$$$$$$$$$$$$$$$$$$$DGN$$$$$$$$$$$$$$$$$$$$
$$$$USERNAME$$$$