DocuSign Envelope ID: C2C1A29C-227F-4A8A-A531-41AC24DC46B0

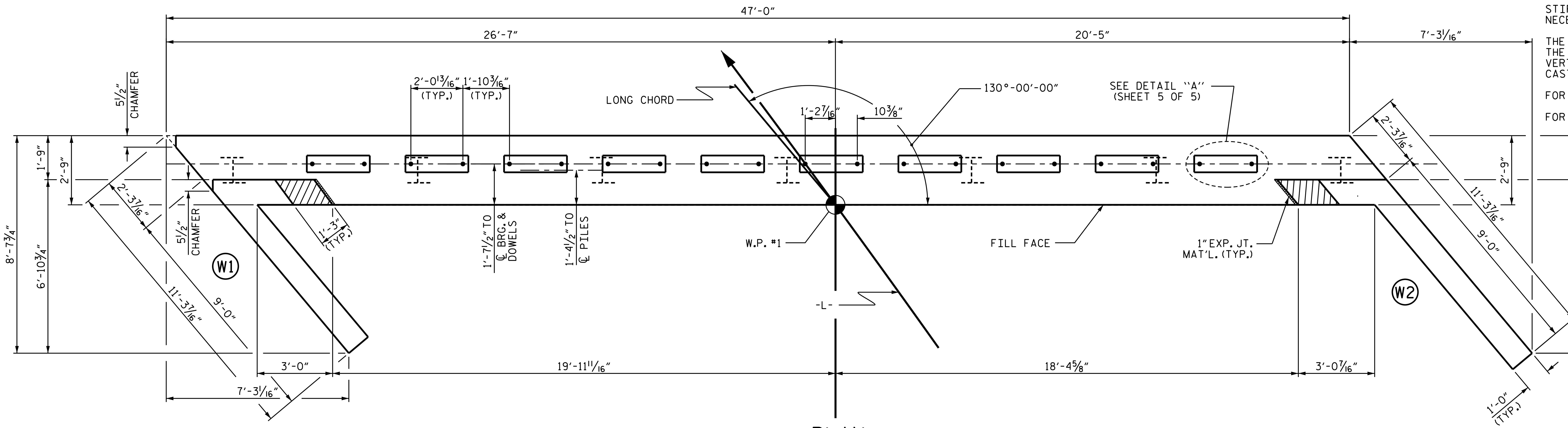

PLAN

WORKLINE

NOTES

STIRRUPS IN CAP MAY BE SHIFTED AS NECESSARY TO CLEAR DOWELS.

THE CONCRETE IN THE SHADED AREA OF THE WING SHALL BE POURED AFTER THE VERTICAL CONCRETE BARRIER RAIL IS CAST IF SLIP FORMING IS USED.

FOR PILE SPLICE DETAILS, SEE SHEET 5 OF 5.

FOR WING DETAILS, SEE SHEET 3 OF 5.

TOP OF PILE ELEVATIONS	
1	1130.13
2	1130.43
3	1130.72
4	1131.01
5	1131.31
6	1131.60
7	1131.89

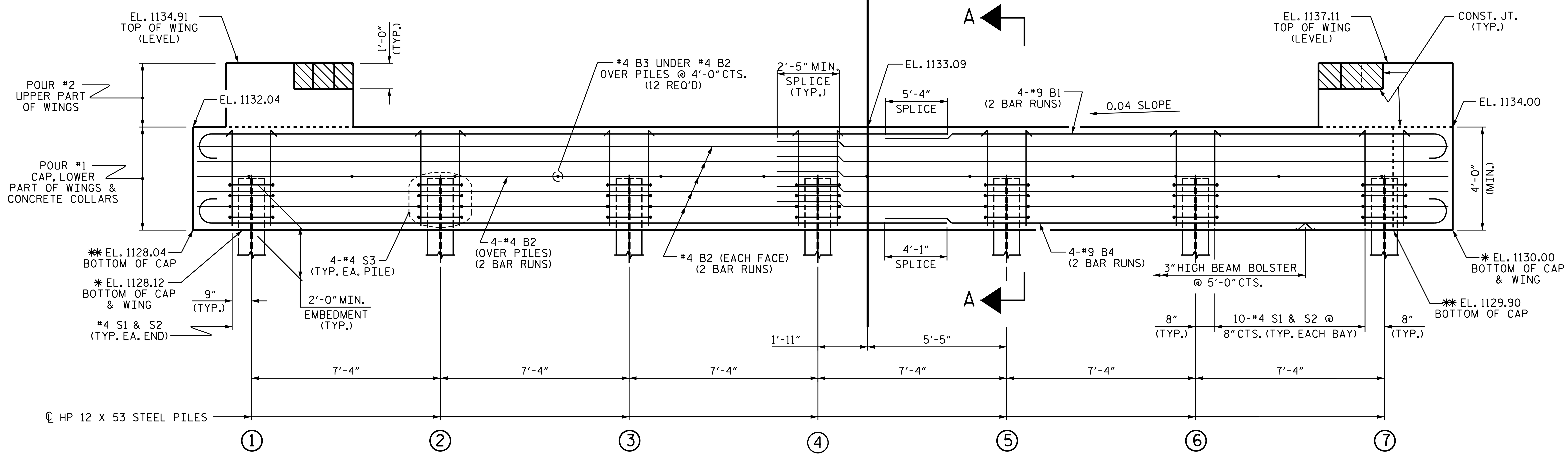

ELEVATION

WINGS NOT SHOWN FOR CLARITY.
FOR SECTION A-A, SEE SHEET 5 OF 5.
CONCRETE COLLARS FOR STEEL PILES NOT SHOWN IN PLAN AND ELEVATION VIEWS FOR CLARITY.
SEE "CORROSION PROTECTION FOR STEEL PILES DETAIL", SHEET 5 OF 5.

✱ - ELEVATION SHOWN ALONG FILL FACE
✱✱ - ELEVATION SHOWN ALONG FRONT FACE OF CAP

PROJECT NO. 17BP.11.R.153
WILKES COUNTY
STATION: 15+23.00 -L-

SHEET 1 of 5

STATE OF NORTH CAROLINA
DEPARTMENT OF TRANSPORTATION
RALEIGH

SUBSTRUCTURE

END BENT No. 1

ms consultants, inc.
5444 Wade Park Blvd.
Suite 160
Raleigh, NC 27607
NC License Number : C-3239

NORTH CAROLINA PROFESSIONAL SEAL 037903 ENGINEER JEFFREY M KEPICH

DocuSigned by: Jeffrey Kepich 5/26/2021

DOCUMENT NOT CONSIDERED FINAL UNLESS ALL SIGNATURES COMPLETED

REVISIONS						SHEET NO.
NO.	BY:	DATE:	NO.	BY:	DATE:	S-9
1			3			TOTAL SHEETS
2			4			16

DRAWN BY : J.M. KEPICH DATE : 02/21
CHECKED BY : L.M. SAMPLES DATE : 05/21
DESIGN ENGINEER OF RECORD : J.M. KEPICH DATE : 05/21

$$$$$$SYSTIME$$$$$
$$$$$$$$$$$$$$DGN$$$$$$$$$$$$$$$$
$$$$USERNAME$$$$