DocuSign Envelope ID: C2C1A29C-227F-4A8A-A531-41AC24DC46B0

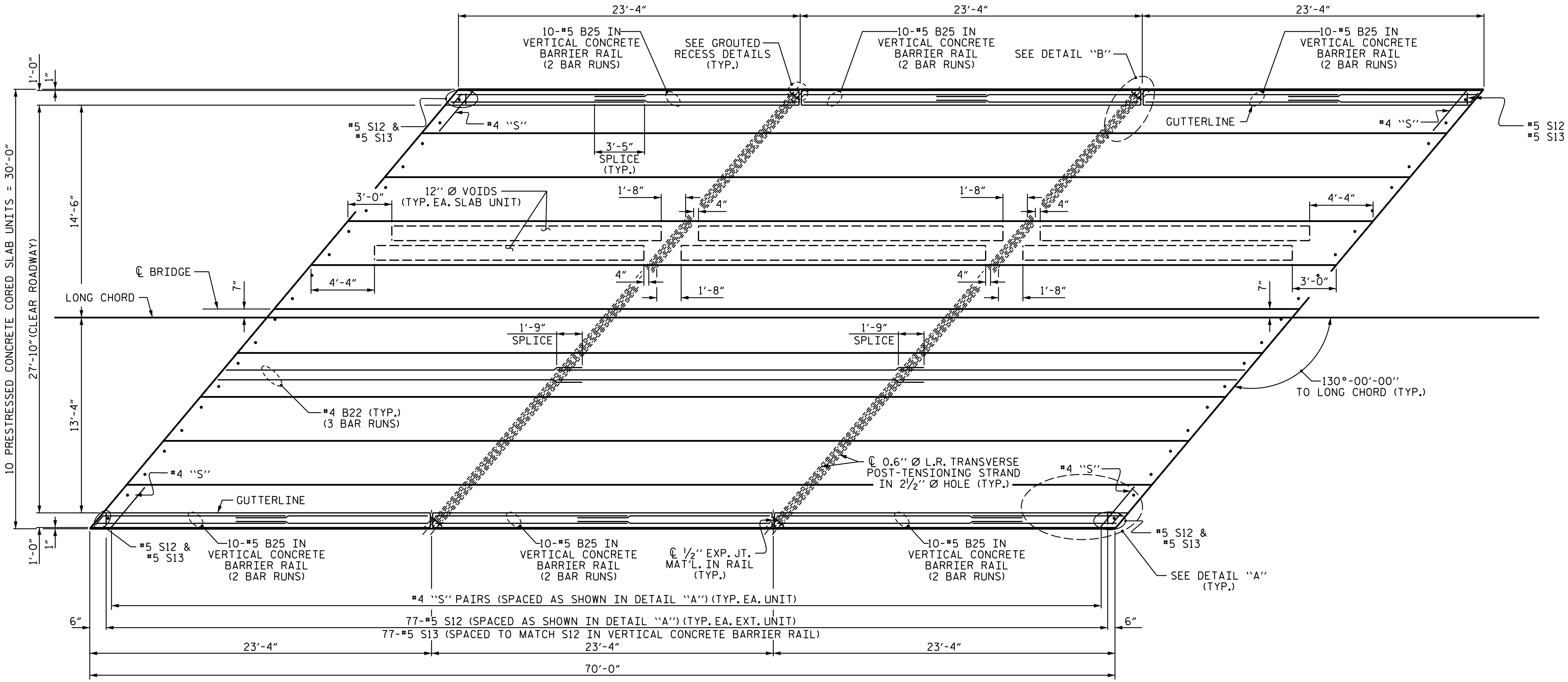

PLAN OF UNIT

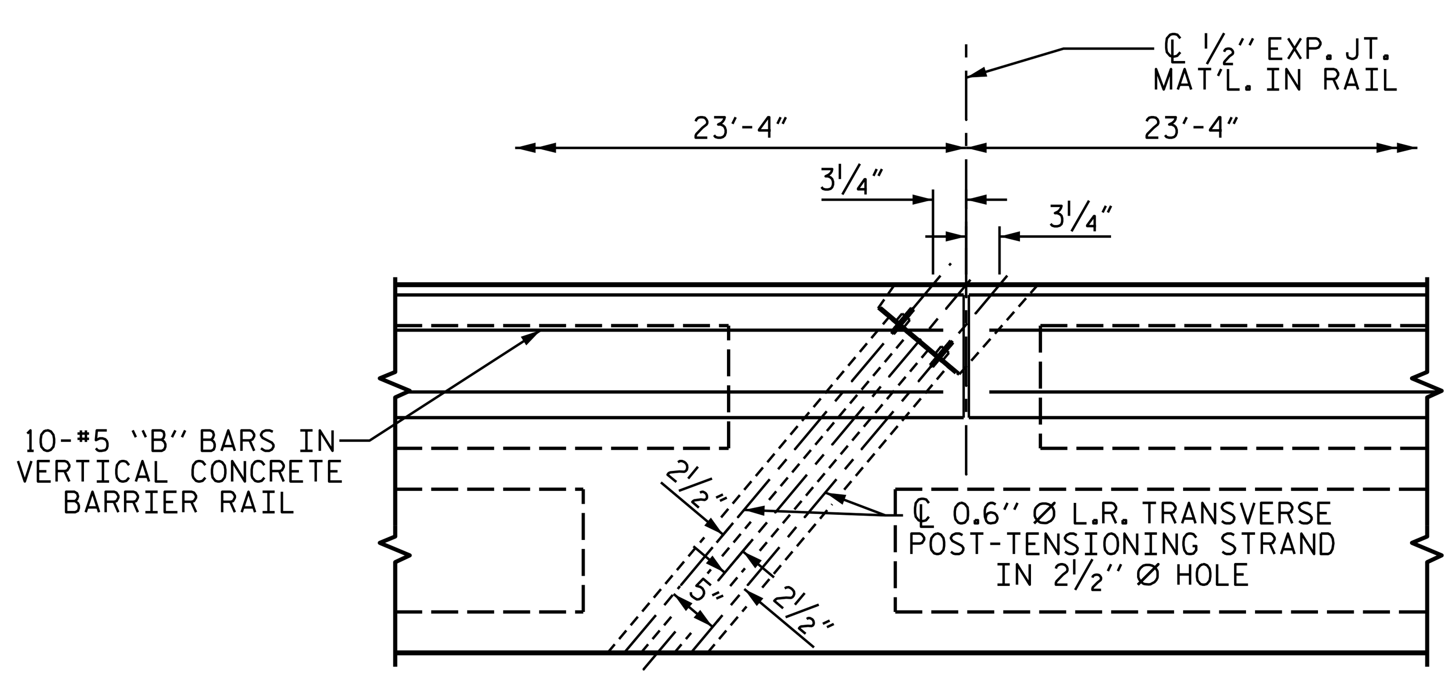

DETAIL "B"

#4 S11 BARS MAY BE SHIFTED AS NECESSARY TO MAINTAIN 1" CLEAR TO GROUTED RECESS AND 2½" Ø TRANSVERSE POST-TENSIONING STRAND HOLES

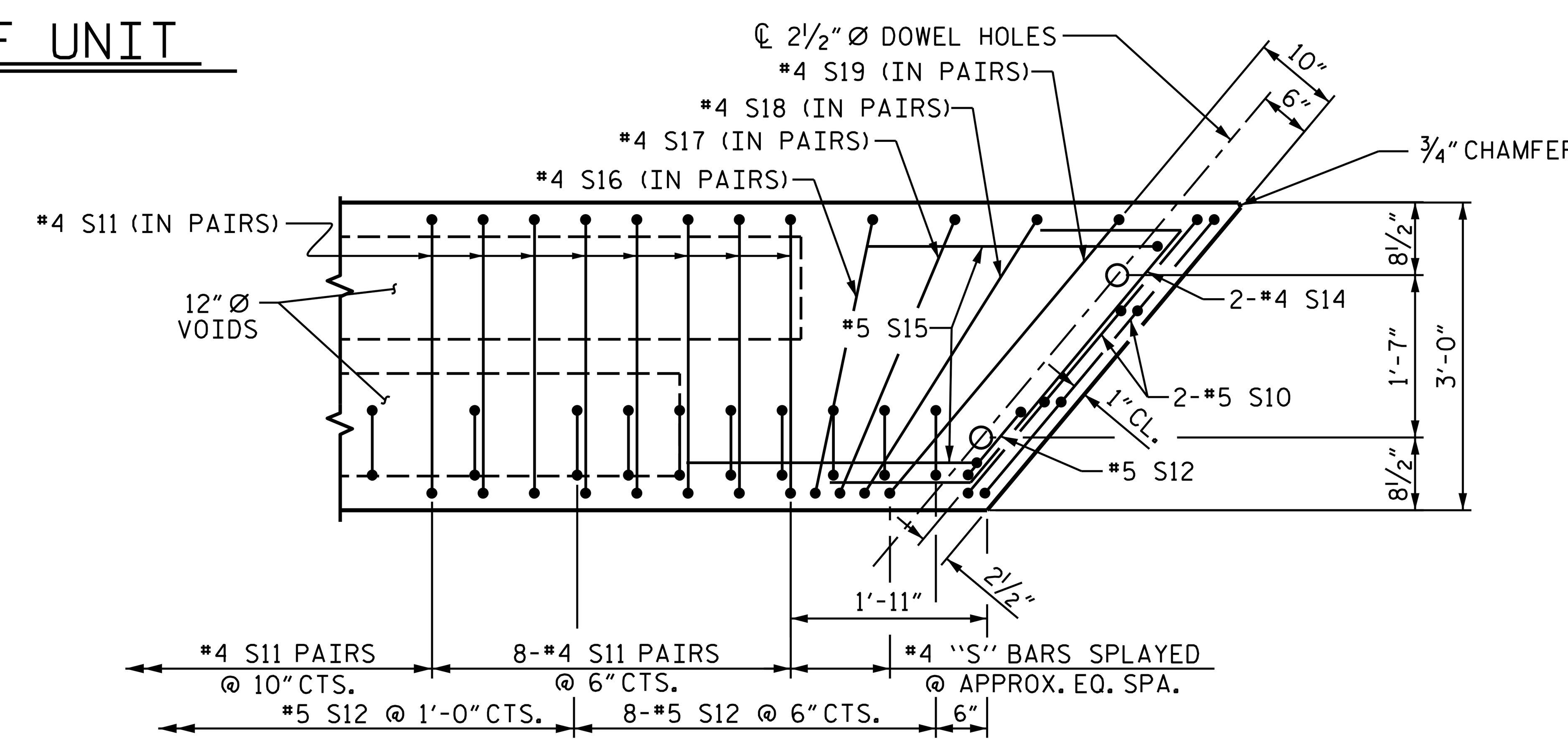

DETAIL "A"

(SIMILAR EACH END OF UNIT)
NOTE: EXTERIOR UNIT SHOWN - INTERIOR UNIT SIMILAR EXCEPT OMIT #5 S12 BARS.

PROJECT NO. 17BP.11.R.153

WILKES COUNTY

STATION: 15+23.00 -L-

SHEET 2 of 3

STATE OF NORTH CAROLINA
DEPARTMENT OF TRANSPORTATION
RALEIGH

PLAN OF 70' UNIT 27'-10" CLEAR ROADWAY 130° SKEW

REVISIONS					
NO.	BY:	DATE:	NO.	BY:	DATE:
1			3		
2			4		

SHEET NO. S-6
TOTAL SHEETS 16

ms consultants, inc.
5444 Wade Park Blvd.
Suite 160
Raleigh, NC 27607
NC License Number : C-3239

NORTH CAROLINA PROFESSIONAL SEAL 037903 ENGINEER JEFFREY M KEPICH

DocuSigned by: Jeffrey Kepich 5/26/2021

DOCUMENT NOT CONSIDERED FINAL UNLESS ALL SIGNATURES COMPLETED

DRAWN BY :	J.M. KEPICH	DATE :	02/21
CHECKED BY :	L.M. SAMPLES	DATE :	05/21
DESIGN ENGINEER OF RECORD :	J.M. KEPICH	DATE :	05/21

$$$$$$SYSTIME$$$$$
$$$$$$$$$$$$$$DGN$$$$$$$$$$$$$$$$$
$$$$USERNAME$$$$$