DocuSign Envelope ID: DF85830D-6EB1-4FEF-A45C-C29E6479A883

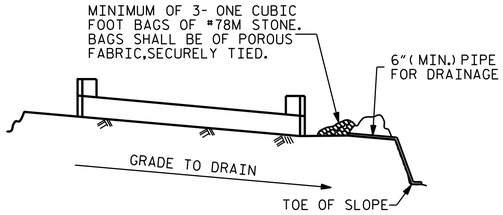

BAGGED STONE AND PIPE SHALL BE PLACED IMMEDIATELY AFTER COMPLETION OF END BENT EXCAVATION. PIPE MAY BE EITHER CONCRETE, CORRUGATED STEEL, CORRUGATED ALUMINUM ALLOY, OR CORRUGATED PLASTIC. PERFORATED PIPE WILL NOT BE ALLOWED.

BAGGED STONE SHALL REMAIN IN PLACE UNTIL THE ENGINEER DIRECTS THAT IT BE REMOVED. THE CONTRACTOR SHALL REMOVE AND DISPOSE OF SILT ACCUMULATIONS AT BAGGED STONE WHEN SO DIRECTED BY THE ENGINEER. BAGS SHALL BE REMOVED AND REPLACED WHENEVER THE ENGINEER DETERMINES THAT THEY HAVE DETERIORATED AND LOST THEIR EFFECTIVENESS.

NO SEPARATE PAYMENT WILL BE MADE FOR THIS WORK AND THE ENTIRE COST OF THIS WORK SHALL BE INCLUDED IN THE UNIT CONTRACT PRICE BID FOR THE SEVERAL PAY ITEMS.

TEMPORARY DRAINAGE AT END BENT

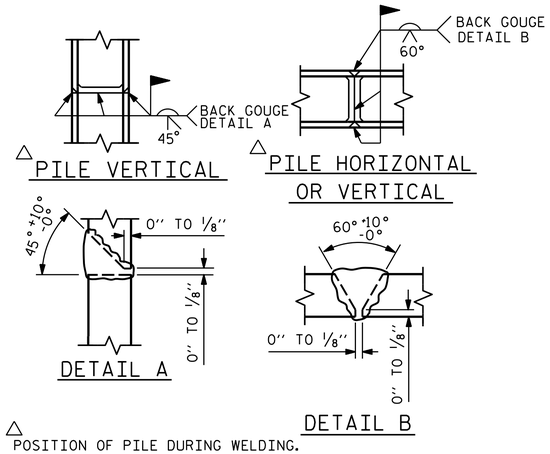

△ POSITION OF PILE DURING WELDING.

PILE SPLICE DETAILS

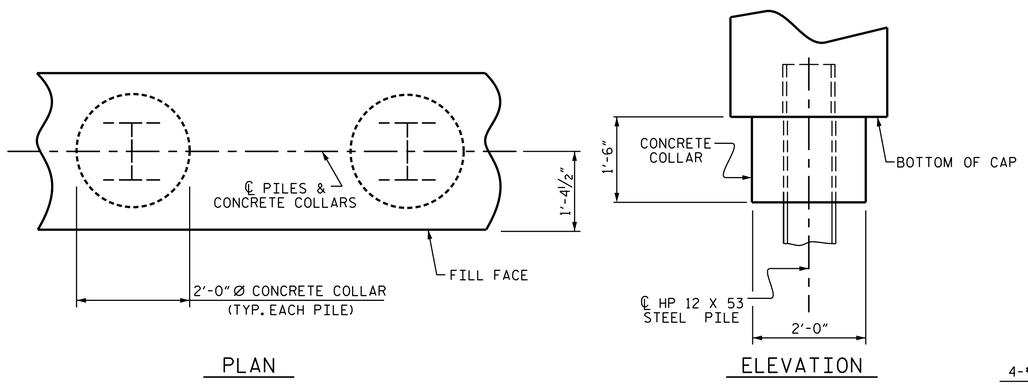

CORROSION PROTECTION FOR STEEL PILES DETAIL

(END BENT No. 1 SHOWN, END BENT No. 2 SIMILAR BY ROTATION)

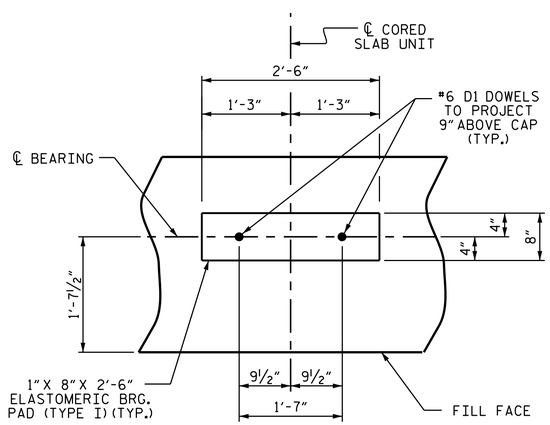

DETAIL "A"

(END BENT No. 1 SHOWN, END BENT No. 2 SIMILAR BY ROTATION)

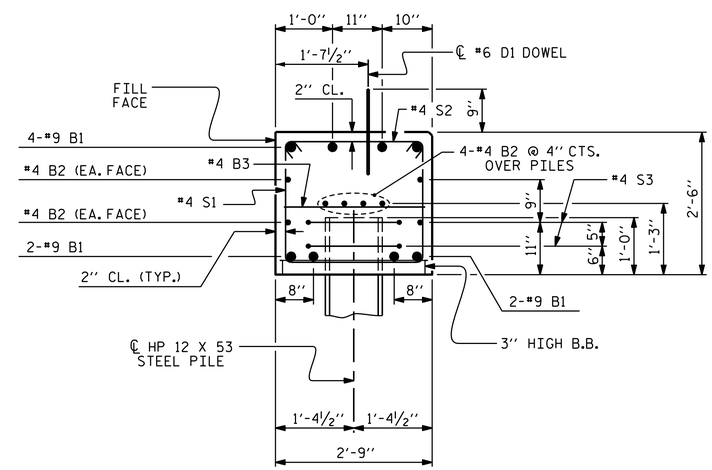

SECTION A-A

(CONCRETE COLLAR NOT SHOWN FOR CLARITY. SEE "CORROSION PROTECTION FOR STEEL PILES DETAIL.")

BAR TYPES

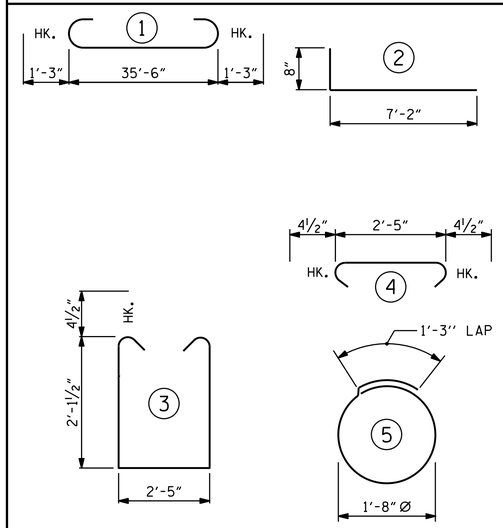

ALL BAR DIMENSIONS ARE OUT TO OUT.

END BENT No. 1	END BENT No. 2
HP 12 X 53 STEEL PILES NO: 5 LIN. FT.= 150	HP 12 X 53 STEEL PILES NO: 5 LIN. FT.= 125
PILE DRIVING EQUIPMENT SETUP FOR HP 12 X 53 STEEL PILES NO: 5	PILE DRIVING EQUIPMENT SETUP FOR HP 12 X 53 STEEL PILES NO: 5

BILL OF MATERIAL FOR ONE END BENT

BAR	NO.	SIZE	TYPE	LENGTH	WEIGHT
B1	8	#9	1	38'-0"	1034
B2	16	#4	STR	19'-1"	204
B3	9	#4	STR	2'-5"	15
D1	20	#6	STR	1'-6"	45
H1	24	#4	2	7'-10"	126
K1	12	#4	STR	2'-11"	23
S1	46	#4	3	7'-5"	228
S2	46	#4	4	3'-2"	97
S3	10	#4	5	6'-6"	43
V1	48	#4	STR	4'-8"	150

REINFORCING STEEL (FOR ONE END BENT) 1965 LBS.

CLASS A CONCRETE BREAKDOWN (FOR ONE END BENT)

POUR #1 CAP, LOWER PART OF WINGS & COLLARS 11.2 C.Y.

POUR #2 UPPER PART OF WINGS 2.0 C.Y.

TOTAL CLASS A CONCRETE 13.2 C.Y.

PROJECT NO. BR-0107
IREDELL COUNTY
STATION: 17+68.00 -L-

SHEET 4 of 4

STATE OF NORTH CAROLINA
DEPARTMENT OF TRANSPORTATION
RALEIGH

SUBSTRUCTURE

END BENT No. 1 & 2 DETAILS

DocuSigned by: Lisa M. Samples 5/19/2021

NORTH CAROLINA PROFESSIONAL SEAL 037031 ENGINEER LISA M. SAMPLES

ms consultants, inc.
5444 Wake Park Blvd.
Suite 160
Raleigh, NC 27607
NC License Number : C-3239

DOCUMENT NOT CONSIDERED FINAL UNLESS ALL SIGNATURES COMPLETED

REVISIONS							
NO.	BY:	DATE:	NO.	BY:	DATE:	SHEET NO.	S-12
1			3			TOTAL SHEETS	14
2			4				

ASSEMBLED BY : J.M. KEPICH DATE : 11/19
CHECKED BY : L.M. SAMPLES DATE : 03/20
DRAWN BY : DGE 12/09
CHECKED BY : MKT 01/10
REV. 4/17 MAA/THC

$$$$$$$SYSTIME$$$$$$
$$$$$$$$$$$$$$$$$$DGN$$$$$$$$$$$$$$$$$$$$$$
$$$$USERNAME$$$$

STD. NO. EB_30_90S