DocuSign Envelope ID: 5825C209-0D3C-445D-B3B5-A4906D5A3EE4

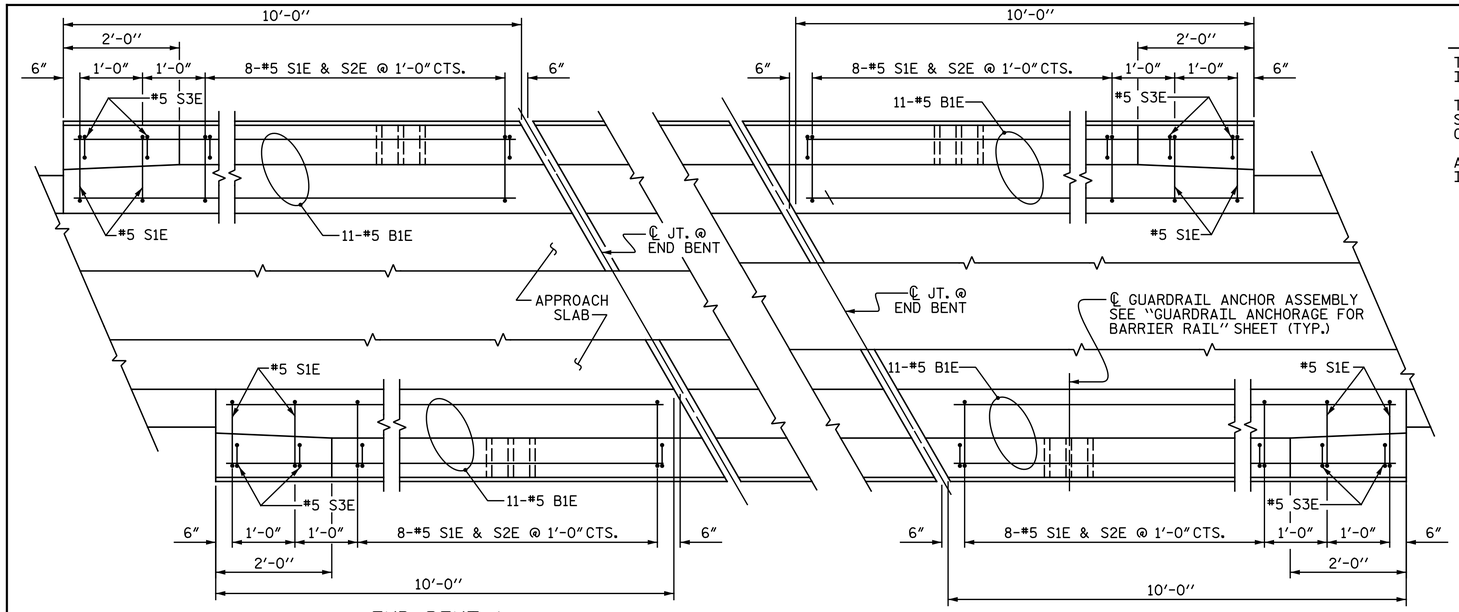

END BENT 1

END BENT 2

PLAN OF BARRIER RAIL

NOTES

THE COST OF THE BARRIER RAIL ON THE APPROACH SLAB SHALL BE INCLUDED IN THE LINEAR FOOT CONTRACT PRICE BID FOR "CONCRETE BARRIER RAIL".

THE BARRIER RAIL AND MONOLITHIC CONCRETE ISLAND ON EACH APPROACH SLAB SHALL NOT BE CAST UNTIL ALL APPROACH SLAB CONCRETE HAS BEEN CAST AND HAS REACHED A MINIMUM COMPRESSIVE STRENGTH OF 3,000 PSI.

ALL REINFORCING STEEL IN BARRIER RAILS AND MONOLITHIC CONCRETE ISLAND SHALL BE EPOXY COATED.

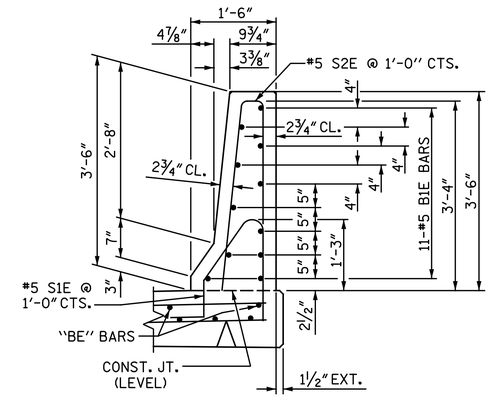

SECTION THRU RAIL

BAR TYPES

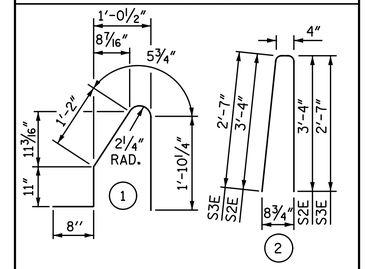

ALL BAR DIMENSIONS ARE OUT TO OUT

BILL OF MATERIAL

BARRIER RAIL ONLY

BAR	NO.	SIZE	TYPE	LENGTH	WEIGHT
B1E	44	#5	STR	9'-7"	440
S1E	40	#5	1	5'-1"	212
S2E	32	#5	2	7'-0"	234
S3E	8	#5	2	5'-6"	46

EPOXY COATED REINFORCING STEEL	LBS.	932
CLASS AA CONCRETE	C.Y.	5.4
CONCRETE BARRIER RAIL	LIN. FT.	40

BILL OF MATERIAL

MONOLITHIC CONCRETE ISLAND @ END BENT 1

BAR	NO.	SIZE	TYPE	LENGTH	WEIGHT
B3E	6	#4	STR	6'-0"	24
B4E	1	#4	STR	2'-10"	2
B5E	1	#4	STR	3'-11"	3
B6E	1	#4	STR	4'-11"	3
G1E	11	#4	STR	2'-11"	21

EPOXY COATED REINFORCING STEEL	LBS.	53
CLASS AA CONCRETE	C.Y.	0.7

MONOLITHIC CONCRETE ISLAND @ END BENT 2

BAR	NO.	SIZE	TYPE	LENGTH	WEIGHT
B2E	3	#4	STR	14'-8"	29
G1E	12	#4	STR	2'-11"	23

EPOXY COATED REINFORCING STEEL	LBS.	52
CLASS AA CONCRETE	C.Y.	0.8

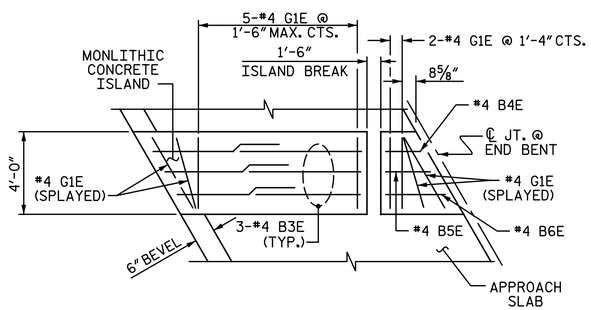

PLAN OF MONOLITHIC CONCRETE ISLAND @ END BENT 1

DISCONTINUE BEVEL UNDER ISLAND

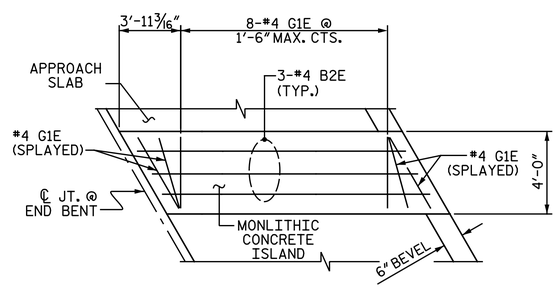

PLAN OF MONOLITHIC CONCRETE ISLAND @ END BENT 2

DISCONTINUE BEVEL UNDER ISLAND

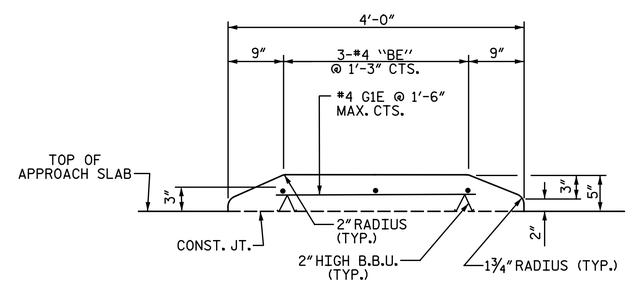

SECTION THRU MONOLITHIC CONCRETE ISLAND

SLOPE TOP OF ISLAND TO MATCH TOP OF APPROACH SLAB

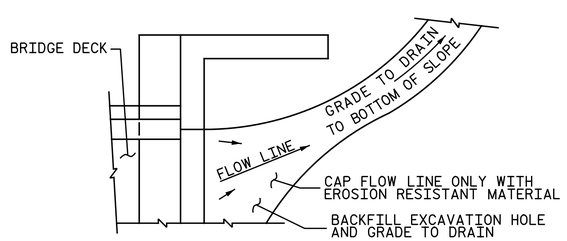

NOTE: IF THE APPROACH SLAB IS NOT CONSTRUCTED IMMEDIATELY AFTER THE BACKFILLING OF THE END BENT EXCAVATION, GRADE TO DRAIN TO THE BOTTOM OF THE SLOPE AND PROVIDE EROSION RESISTANT MATERIAL, SUCH AS FIBERGLASS ROVING OR AS DIRECTED BY THE ENGINEER TO PREVENT SOIL EROSION AND TO PROTECT THE AREA ADJACENT TO THE STRUCTURE. THE CONTRACTOR WILL BE REQUIRED TO REMOVE THESE MATERIALS PRIOR TO CONSTRUCTION OF THE APPROACH SLAB.

TEMPORARY DRAINAGE DETAIL

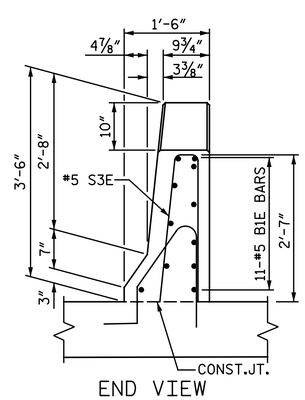

END VIEW

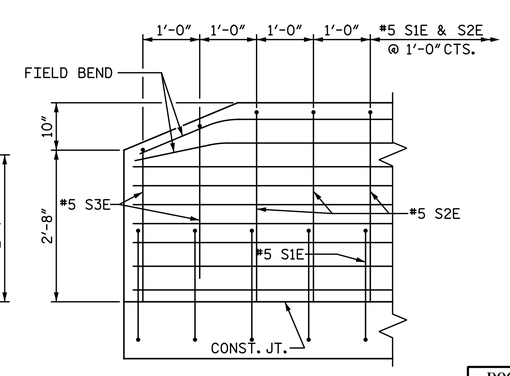

SIDE VIEW

END OF RAIL DETAILS

PROJECT NO. I-5883

HARNETT COUNTY

STATION: 26+80.73 -Y17-

DocuSigned by: Amanda H. Sharpe 81D6FFF4ECEF4D2...

4/9/2020

NORTH CAROLINA PROFESSIONAL SEAL 043878 ENGINEER AMANDA H. SHARPE

STATE OF NORTH CAROLINA
DEPARTMENT OF TRANSPORTATION
RALEIGH

STANDARD

BRIDGE APPROACH SLAB DETAILS

DOCUMENT NOT CONSIDERED FINAL UNLESS ALL SIGNATURES COMPLETED

Michael Baker INTERNATIONAL

Michael Baker Engineering
8000 Regency Parkway, Suite 600
Cary, North Carolina 27518
NC License No.: F-1084

REVISIONS								
NO.	BY:	DATE:	NO.	BY:	DATE:	SHEET NO.	TOTAL SHEETS
1			3			S2-33	33
2			4				

ASSEMBLED BY : N.B. SPEAKS		DATE : 12-19-18	
CHECKED BY : V.A. PATEL		DATE : 12-20-18	
DRAWN BY : FCJ	11/88	REV. 6/13	MAA/GM
CHECKED BY : ARB	11/88	REV. 12/17	MAA/THC
		REV. 5/18	MAA/THC

STD. NO. BAS4