DocuSign Envelope ID: 5825C209-0D3C-445D-B3B5-A4906D5A3EE4

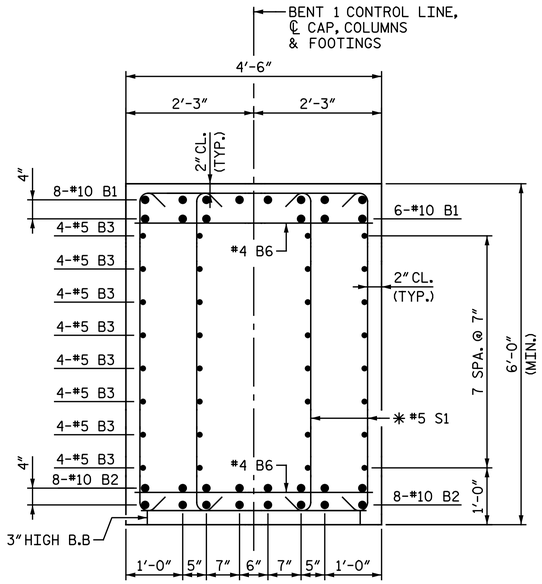

SECTION A-A

✱ INVERT ALTERNATE STIRRUPS

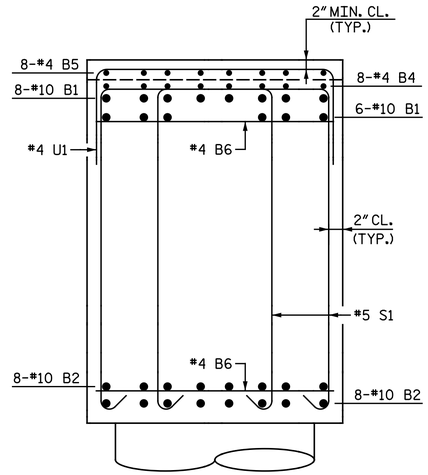

SECTION B-B

B3 BARS NOT SHOWN FOR CLARITY.

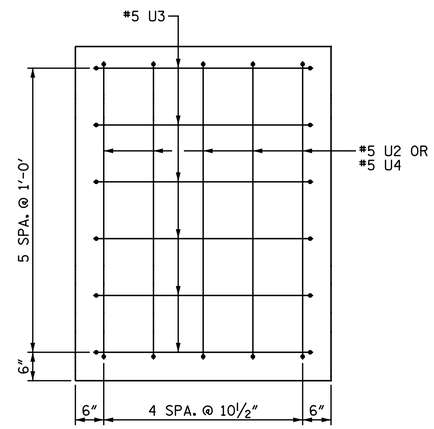

END VIEW

BAR TYPES

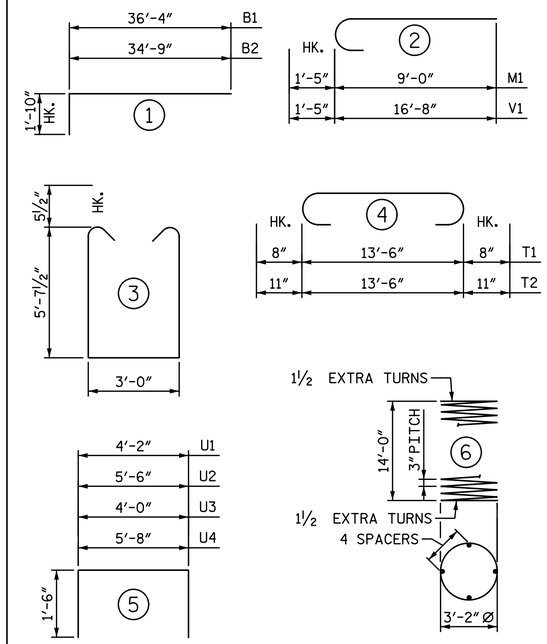

ALL BAR DIMENSIONS ARE OUT TO OUT.

✱✱ THE SP-1 SPIRAL REINFORCING STEEL SHALL BE W20 OR D20 COLD DRAWN WIRE OR #4 PLAIN OR DEFORMED BAR.

BILL OF MATERIAL

BENT 1

BAR	NO.	SIZE	TYPE	LENGTH	WEIGHT
B1	28	#10	1	38′ - 2″	4,598
B2	32	#10	1	36′ - 7″	5,037
B3	64	#5	STR.	31′ - 10″	2,125
B4	8	#4	STR.	33′ - 0″	176
B5	8	#4	STR.	4′ - 10″	26
B6	34	#4	STR.	4′ - 2″	95
M1	36	#10	2	10′ - 5″	1,614
S1	212	#5	3	15′ - 2″	3,354
T1	102	#6	4	14′ - 10″	2,273
T2	132	#8	4	15′ - 4″	5,404
U1	57	#4	5	7′ - 2″	273
U2	5	#5	5	8′ - 6″	44
U3	12	#5	5	7′ - 0″	88
U4	5	#5	5	8′ - 8″	45
V1	36	#10	2	18′ - 1″	2,801
REINFORCING STEEL				LBS.	27,953
SP-1	3	✱✱	6	579′ - 5″	1,161
SPIRAL COLUMN REINFORCING STEEL				LBS.	1,161
CLASS A CONCRETE					
POUR 1 - FOOTINGS				C.Y.	119.8
POUR 2 - COLUMNS				C.Y.	14.7
POUR 3 - CAP				C.Y.	64.5
TOTAL CLASS A CONCRETE				C.Y.	199.0
FOUNDATION EXCAVATION FOR BENT				LUMP SUM	
PILE DRIVING EQUIPMENT SETUP FOR HP 12x53 STEEL PILES				EA.	33
HP 12x53 STEEL PILES NO. 33				LIN. FT.	2,145
PILE REDRIVES				EA.	16

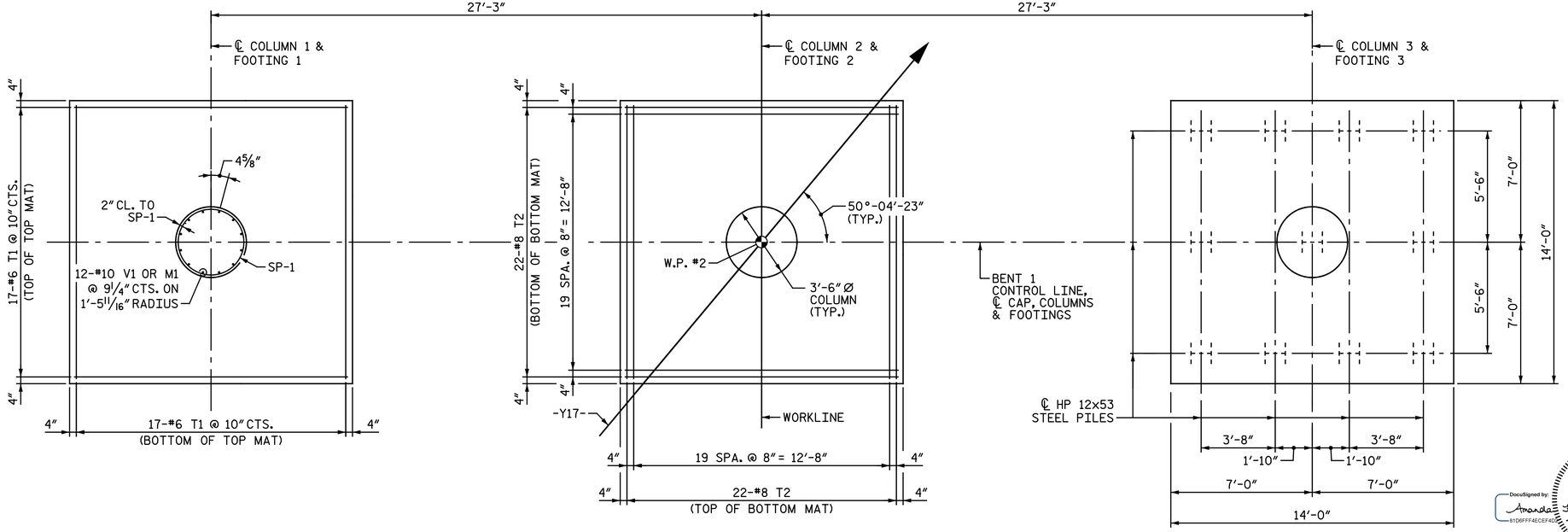

PLAN OF COLUMNS & FOOTINGS

REINFORCING STEEL DIMENSIONS AND DETAILS ARE TYPICAL FOR EACH COLUMN AND FOOTING.

DIMENSIONS AND PILE LOCATIONS ARE TYPICAL FOR EACH FOOTING.

PROJECT NO. I-5883
HARNETT COUNTY
STATION: 26+80.73 -Y17-

STATE OF NORTH CAROLINA
DEPARTMENT OF TRANSPORTATION
RALEIGH
SUBSTRUCTURE

BENT 1 DETAILS

DocuSigned by: Amanda H. Sharpe
B1DFFF4ECEF6D...
4/9/2020

NORTH CAROLINA PROFESSIONAL SEAL 043278 ENGINEER AMANDA H. SHARPE

DOCUMENT NOT CONSIDERED FINAL UNLESS ALL SIGNATURES COMPLETED

Michael Baker INTERNATIONAL
Michael Baker Engineering
8000 Regency Parkway, Suite 600
Cary, North Carolina 27518
NC License No.: F-1084

REVISIONS						
NO.	BY:	DATE:	NO.	BY:	DATE:	
1			3			
2			4			

SHEET NO. S2-26
TOTAL SHEETS 33

DRAWN BY : M. D. MAYHEW DATE : 11-12-19
CHECKED BY : A. H. SHARPE DATE : 12-4-19