DocuSign Envelope ID: 5825C209-0D3C-445D-B3B5-A4906D5A3EE4

NOTES:

Ⓐ 33-#4 B1E @ 1'-6" CTS. (SPLICE WITH #6 B3E) (TOP OF SLAB)

Ⓑ 33-#6 B3E @ 1'-6" CTS. (SPLICE WITH #4 B1E) (TOP OF SLAB)

Ⓒ 64-#6 B4E (SPA. AS SHOWN IN "TYPICAL SECTION" SHEET 3 OF 3) (STAGGERED AS SHOWN) (TOP OF SLAB)

FOR REINFORCING STEEL IN CONCRETE BARRIER RAIL, SEE "CONCRETE BARRIER RAIL" SHEET.

FOR DECK POURING SEQUENCE AND LOCATION OF TRANSVERSE CONSTRUCTION JOINTS, SEE "BILL OF MATERIAL" SHEET 1 OF 2.

FOR "TRANSVERSE CONSTRUCTION JOINT DETAIL" & "BENT DIAPHRAGM DETAIL", SEE "PLAN OF SPANS" SHEET 2 OF 2.

FOR REINFORCING STEEL & LOCATION OF MONOLITHIC CONCRETE ISLAND, SEE "MONOLITHIC CONCRETE ISLAND" SHEET.

FOR LOCATION OF DECK DRAINS, SEE "DECK DRAIN LAYOUT" SHEET.

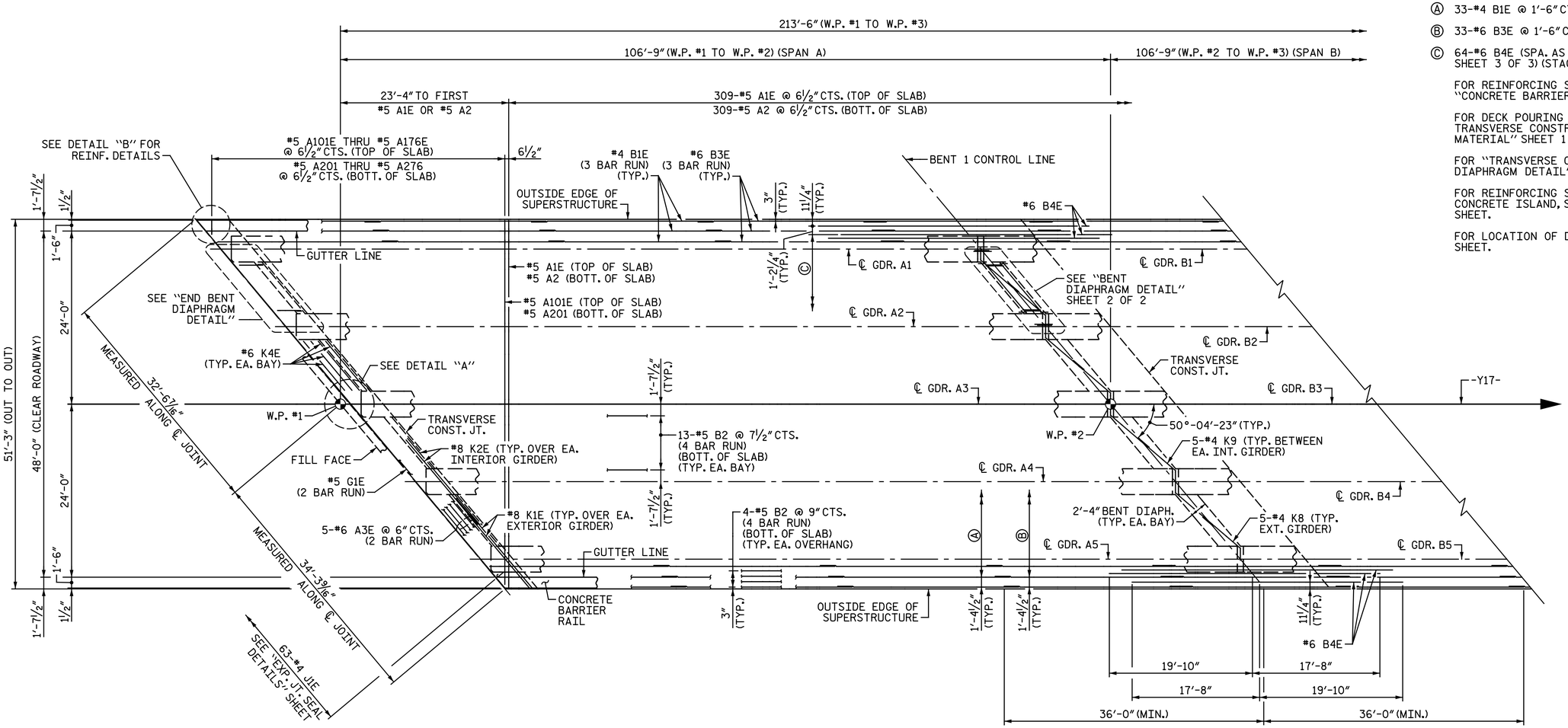

PLAN OF SPAN

SPLICE LENGTHS		
BAR SIZE	EPOXY COATED	UNCOATED
#4	2'-0"	1'-9"
#5	2'-6"	2'-2"
#6	3'-0"	2'-7"

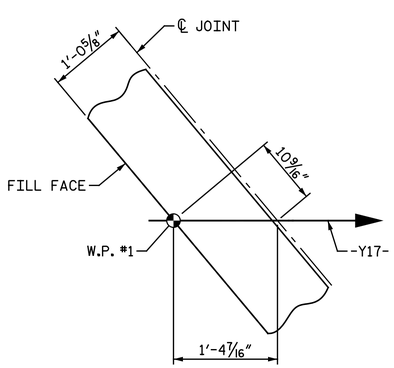

DETAIL "A"

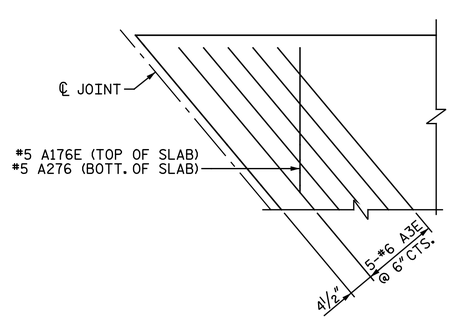

DETAIL "B"

✱ #6 A3E BARS ARE TO BE PLACED PARALLEL TO SKEW, SPACED AS SHOWN, AND LOCATED BELOW B1E BARS.
SEE ALSO "SECTION THRU END BENT DIAPHRAGM" DETAIL ON "TYPICAL SECTION" SHEET 2 OF 3.

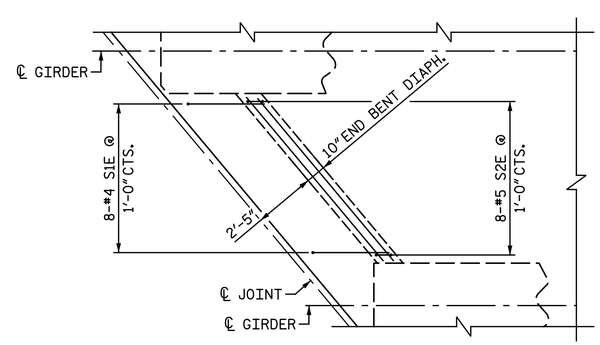

END BENT DIAPHRAGM DETAIL

END BENT 1 SHOWN, END BENT 2 SIMILAR
#8 "KE" BAR NOT SHOWN FOR CLARITY
(TYP. EA. BAY)

PROJECT NO. I-5883
HARNETT COUNTY
STATION: 26+80.73 -Y17-

SHEET 1 OF 2

DocuSigned by: Amanda H. Sharpe 8106FFF4ECEF4D2...
4/9/2020

NORTH CAROLINA PROFESSIONAL SEAL 043878 ENGINEER AMANDA H. SHARPE

STATE OF NORTH CAROLINA
DEPARTMENT OF TRANSPORTATION
RALEIGH

SUPERSTRUCTURE

PLAN OF SPANS

DOCUMENT NOT CONSIDERED FINAL UNLESS ALL SIGNATURES COMPLETED

Michael Baker INTERNATIONAL
Michael Baker Engineering
8000 Regency Parkway, Suite 600
Cary, North Carolina 27518
NC License No.: F-1084

REVISIONS							SHEET NO.
NO.	BY:	DATE:	NO.	BY:	DATE:		S2-8
1			3				TOTAL SHEETS
2			4				33

DRAWN BY : C. E. MAYHEW DATE : 8-31-18
CHECKED BY : A. H. SHARPE DATE : 11-8-18