DocuSign Envelope ID: 1ED214AB-BE9C-49BC-A9B4-81715829B00E

SPLICE LENGTHS		
BAR SIZE	EPOXY COATED	UNCOATED
#4	2'-0"	1'-9"
#5	2'-6"	2'-2"
#6	3'-0"	2'-7"

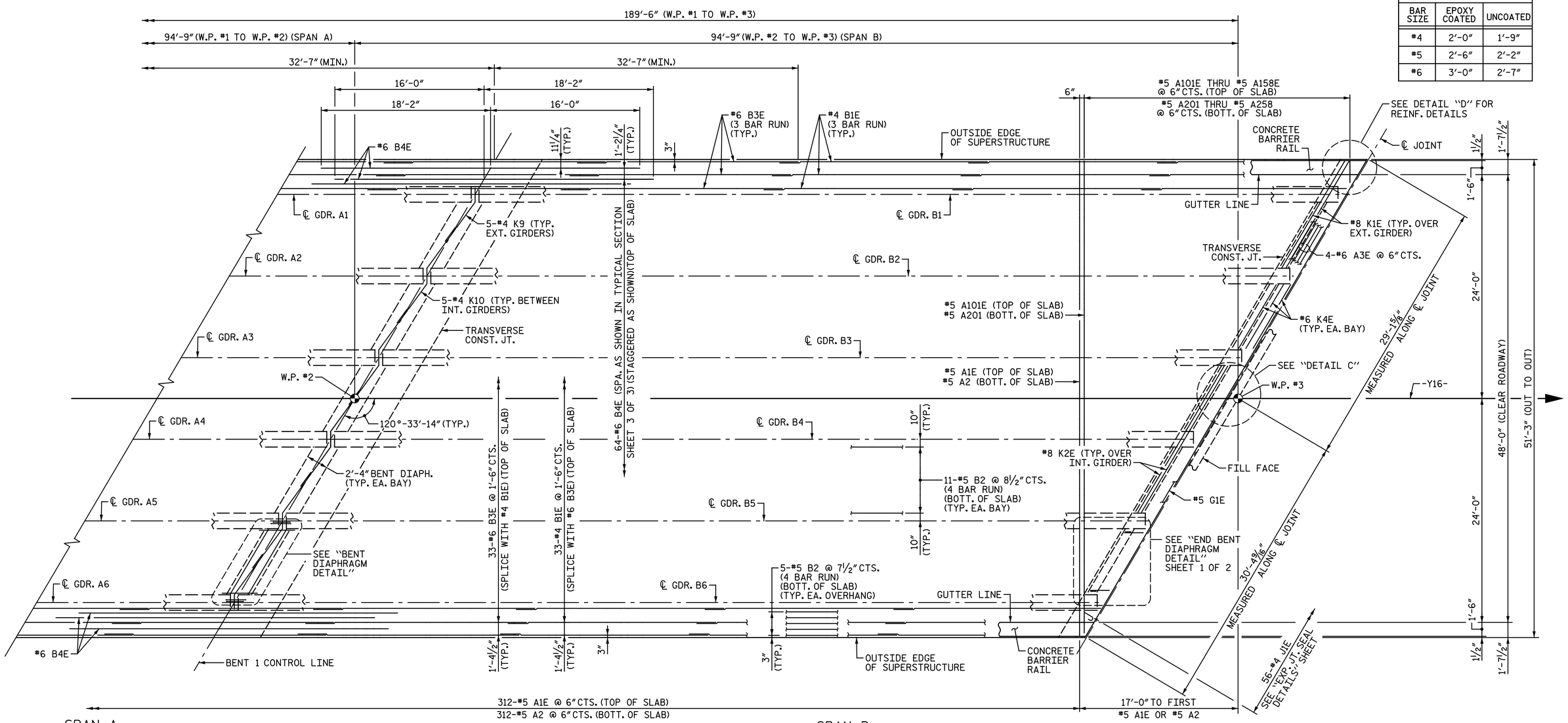

PLAN OF SPAN

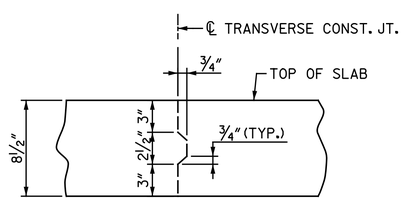

TRANSVERSE CONST. JT. DETAIL

REINFORCING STEEL IN SLAB NOT SHOWN.
REINFORCING STEEL SHALL BE CONTINUOUS THROUGH JOINT.

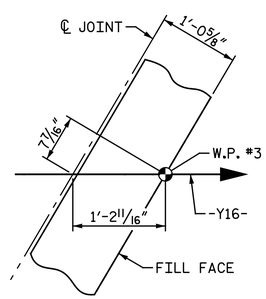

DETAIL "C"

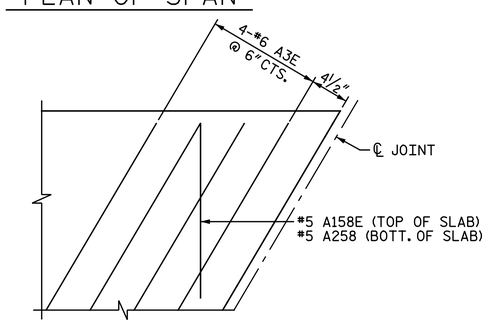

DETAIL "D"

✱#6 A3E BARS ARE TO BE PLACED PARALLEL TO SKEW, SPACED AS SHOWN, AND LOCATED BELOW B1E BARS.
SEE ALSO "SECTION THRU END BENT DIAPHRAGM" DETAIL ON "TYPICAL SECTION" SHEET 2 OF 3.

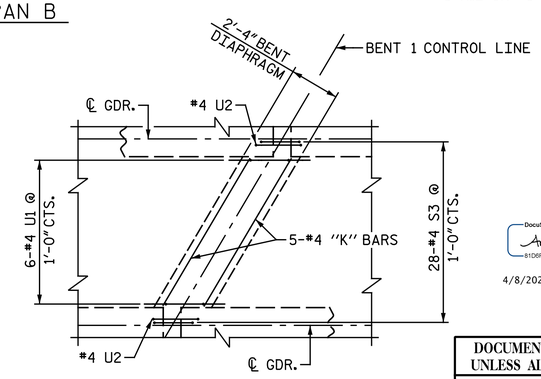

BENT DIAPHRAGM DETAIL

K9 & K10 BARS NOT SHOWN FOR CLARITY (TYP. EA. BAY)

PROJECT NO. I-5883
HARNETT COUNTY
STATION: 27+09.19 -Y16-

SHEET 2 OF 2

STATE OF NORTH CAROLINA
DEPARTMENT OF TRANSPORTATION
RALEIGH
SUPERSTRUCTURE

PLAN OF SPANS

DocuSigned by: Amanda H. Sharpe 81D6FFF4ECEF4D2... 4/8/2020

NORTH CAROLINA PROFESSIONAL SEAL 043878 ENGINEER AMANDA H. SHARPE

DOCUMENT NOT CONSIDERED FINAL UNLESS ALL SIGNATURES COMPLETED

Michael Baker INTERNATIONAL
Michael Baker Engineering
8000 Regency Parkway, Suite 600
Cary, North Carolina 27518
NC License No.: F-1084

REVISIONS								SHEET NO.
NO.	BY:	DATE:	NO.	BY:	DATE:			SI-9
1			3					TOTAL SHEETS
2			4					35

DRAWN BY: C. E. MAYHEW DATE: 10-23-18
CHECKED BY: A. H. SHARPE DATE: 3-26-20