DocuSign Envelope ID: 6481012E-7C63-41A5-B639-5E0DDF0D2843

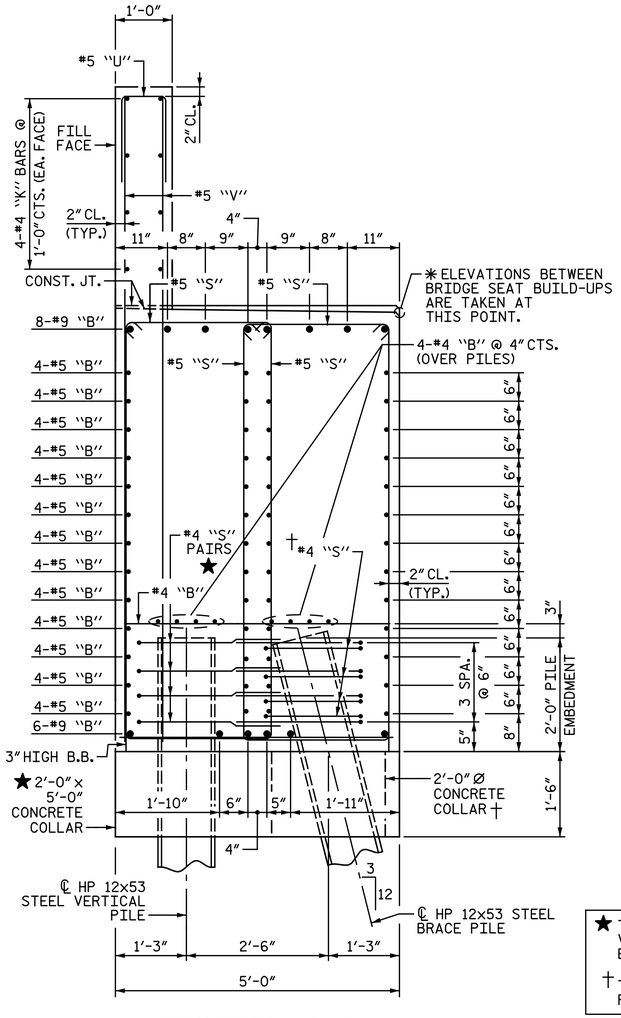

SECTION A-A

BILL OF MATERIAL

END BENT 2 STAGE I

BAR	NO.	SIZE	TYPE	LENGTH	WEIGHT
B1	6	#9	1	59' - 11"	1,222
B2	8	#9	1	38' - 2"	1,038
B3	8	#9	STR.	30' - 4"	825
B4	104	#5	STR.	31' - 11"	3,462
B5	16	#4	STR.	31' - 4"	335
B6	8	#4	STR.	7' - 1"	38
B7	16	#4	STR.	4' - 2"	45
B8	17	#4	STR.	4' - 8"	53
H1	10	#4	5	22' - 8"	151
H2	17	#4	5	18' - 0"	204
H3	7	#4	5	18' - 3"	85
H4	14	#4	5	3' - 6"	33
K1	16	#4	STR.	30' - 1"	322
S1	110	#5	2	18' - 4"	2,103
S2	154	#5	3	3' - 7"	576
S3	98	#5	2	17' - 5"	1,780
S4	40	#4	7	7' - 8"	205
S5	16	#4	4	6' - 6"	69
S16	3	#6	8	5' - 4"	24
S17	3	#6	9	10' - 1"	45
U1	52	#5	7	7' - 4"	398
U2	14	#4	7	7' - 8"	72
V1	104	#5	STR.	10' - 8"	1,157
V2	44	#5	STR.	12' - 5"	570
V3	5	#5	STR.	6' - 11"	36

REINFORCING STEEL LBS. 14,848

CLASS A CONCRETE
POUR 1 -
CAP, COLLARS, LOWER PART OF WING & WING BRACE PILE CAP C.Y. 89.3
POUR 2 -
BACKWALL & UPPER PART OF WING C.Y. 11.5
TOTAL C.Y. 100.8

PILE DRIVING EQUIPMENT SETUP FOR HP 12x53 STEEL PILES EA. 17

HP 12x53 STEEL PILES
NO. 17 LIN. FT. 1,340

PILE REDRIVES EA. 9

★ TYP. EA. LOCATION WITH BRACE PILE AND VERTICAL PILE PAIR (PILES 1&2, 4&5, 7&8, ETC.)

† TYP. EA. LOCATION WITH SINGLE BRACE PILE (PILES 3, 6, 9, ETC.)

END BENT 2 STAGE II

BAR	NO.	SIZE	TYPE	LENGTH	WEIGHT
B9	6	#9	1	59' - 11"	1,222
B10	8	#9	1	38' - 8"	1,052
B11	8	#9	STR.	19' - 9"	537
B12	8	#9	STR.	19' - 1"	519
B13	88	#5	STR.	31' - 11"	2,929
B14	4	#5	STR.	26' - 5"	110
B15	4	#5	STR.	15' - 6"	65
B16	16	#4	STR.	31' - 4"	335
B17	8	#4	STR.	10' - 9"	57
B18	8	#4	STR.	6' - 10"	37
B19	8	#4	STR.	4' - 2"	22
B20	20	#4	STR.	4' - 8"	62
H5	9	#4	6	21' - 10"	131
H6	16	#4	6	17' - 6"	187
H7	7	#4	6	17' - 0"	79
H8	14	#4	6	3' - 6"	33
K2	16	#4	STR.	31' - 4"	335
S6	68	#5	2	17' - 10"	1,265
S7	154	#5	3	3' - 7"	576
S8	40	#5	2	16' - 10"	702
S9	100	#5	2	15' - 10"	1,651
S10	40	#4	7	7' - 8"	205
S11	16	#4	4	6' - 6"	69
S18	3	#6	8	5' - 4"	24
S19	3	#6	9	10' - 1"	45
U3	54	#5	7	7' - 4"	413
U4	18	#4	7	7' - 8"	92
V4	34	#5	STR.	11' - 0"	390
V5	74	#5	STR.	9' - 10"	759
V6	42	#5	STR.	11' - 8"	511
V7	5	#5	STR.	6' - 2"	32

REINFORCING STEEL LBS. 14,446

CLASS A CONCRETE
POUR 1 -
CAP, COLLARS, LOWER PART OF WING & WING BRACE PILE C.Y. 82.1
POUR 2 -
BACKWALL & UPPER PART OF WING C.Y. 11.8
TOTAL C.Y. 93.9

PILE DRIVING EQUIPMENT SETUP FOR HP 12x53 STEEL PILES EA. 17

HP 12x53 STEEL PILES
NO. 17 LIN. FT. 1,340

PILE REDRIVES EA. 9

END BENT 2 STAGE III

BAR	NO.	SIZE	TYPE	LENGTH	WEIGHT
B21	16	#9	STR.	37' - 1"	2,017
B22	12	#9	STR.	35' - 5"	1,445
B23	8	#9	STR.	7' - 11"	215
B24	104	#5	STR.	34' - 8"	3,760
B25	16	#4	STR.	34' - 4"	367
B26	8	#4	STR.	18' - 7"	99
B27	24	#4	STR.	4' - 2"	67
B28	20	#4	STR.	4' - 8"	62
K3	16	#4	STR.	34' - 4"	367
S12	266	#5	2	18' - 4"	5,086
S13	212	#5	3	3' - 7"	792
S14	40	#4	7	7' - 8"	205
S15	16	#4	4	6' - 6"	69
U5	67	#5	7	7' - 4"	512
U6	25	#4	7	7' - 8"	128
V8	134	#5	STR.	11' - 3"	1,572

REINFORCING STEEL LBS. 16,763

CLASS A CONCRETE
POUR 1 -
CAP & COLLARS C.Y. 102.8
POUR 2 -
BACKWALL C.Y. 9.5
TOTAL C.Y. 112.3

PILE DRIVING EQUIPMENT SETUP FOR HP 12x53 STEEL PILES EA. 10

HP 12x53 STEEL PILES
NO. 10 LIN. FT. 700

PILE REDRIVES EA. 4

BAR TYPES

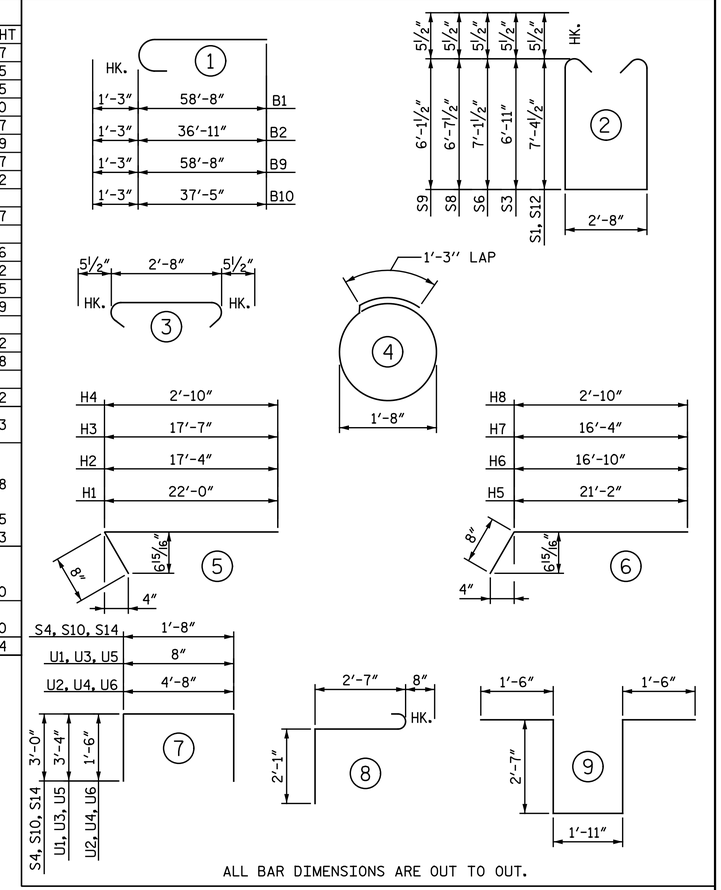

ALL BAR DIMENSIONS ARE OUT TO OUT.

NOTE:
FOR "TEMPORARY DRAINAGE AT END BENT", SEE "END BENT 1 DETAILS" SHEET.

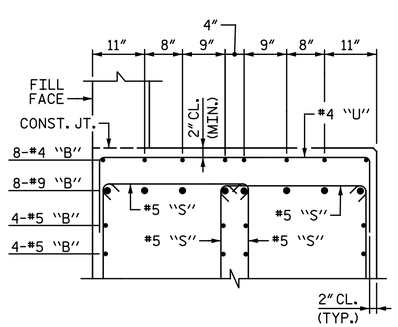

PARTIAL SECTION B-B

"V" & "K" BARS NOT SHOWN FOR CLARITY.

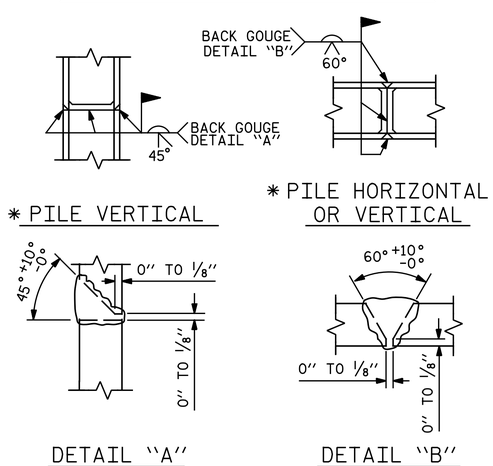

DETAIL "A" DETAIL "B"

PILE SPLICE DETAILS

✱ POSITION OF PILE DURING WELDING

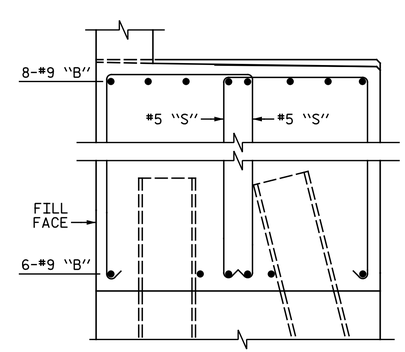

PARTIAL SECTION C-C

ONLY #9 "B" & #5 "S" BARS SHOWN FOR CLARITY. (TYP. EA. PILE)

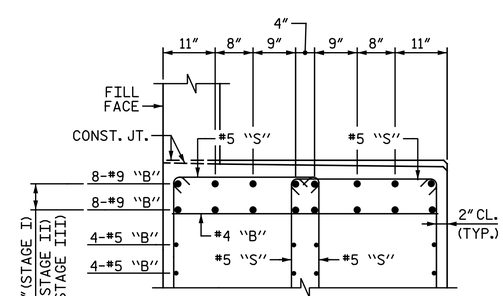

PARTIAL SECTION D-D

"V" & "K" BARS NOT SHOWN FOR CLARITY.

PROJECT NO. I-5986B
JOHNSTON COUNTY
STATION: 1391+19.65 -L-

SHEET 5 OF 5

STATE OF NORTH CAROLINA
DEPARTMENT OF TRANSPORTATION
RALEIGH
SUBSTRUCTURE

END BENT 2 DETAILS

NORTH CAROLINA PROFESSIONAL SEAL 033139 ENGINEER TODD M. GARRISON

DocuSigned by: Todd M. Garrison
616EAF752943466...
4/30/2020

DOCUMENT NOT CONSIDERED FINAL UNLESS ALL SIGNATURES COMPLETED

Michael Baker INTERNATIONAL
Michael Baker Engineering
8000 Regency Parkway, Suite 600
Cary, North Carolina 27518
NC License No.: F-1084

REVISIONS								SHEET NO.
NO.	BY:	DATE:	NO.	BY:	DATE:			S3-39
1			3					TOTAL SHEETS
2			4					44

DRAWN BY : M. D. MAYHEW DATE : 2-27-20
CHECKED BY : T. M. GARRISON DATE : 3-5-20