DocuSign Envelope ID: EAB7CB53-83D2-4B48-A405-E30C1B4B5775

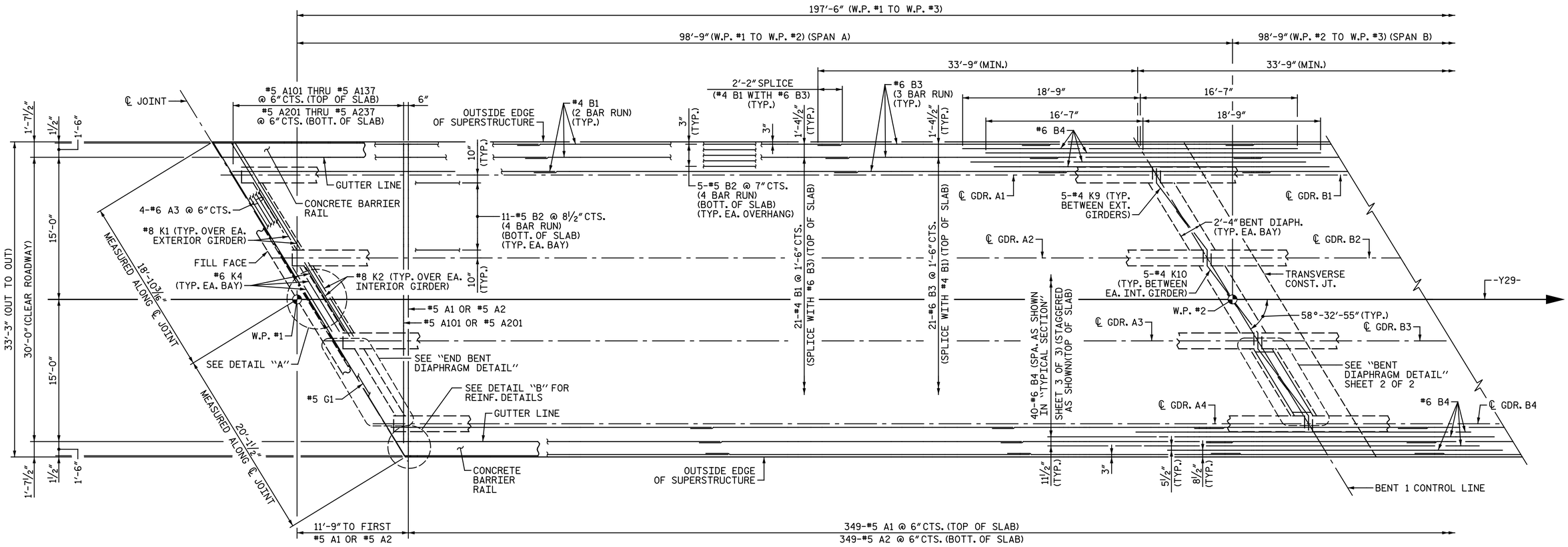

PLAN OF SPAN

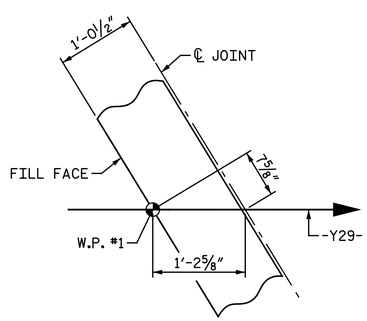

DETAIL "A"

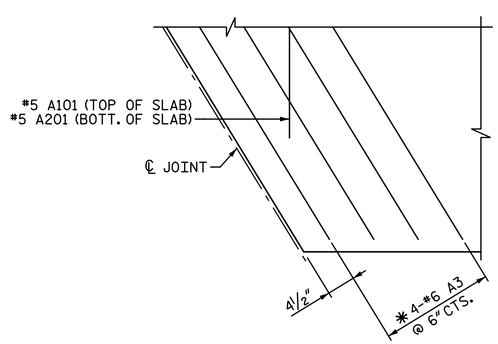

DETAIL "B"

✱#6 A3 BARS ARE TO BE PLACED PARALLEL TO SKEW, SPACED AS SHOWN, AND LOCATED BELOW B1 BARS.
SEE ALSO "SECTION THRU END BENT DIAPHRAGM" DETAIL ON "TYPICAL SECTION" SHEET 2 OF 3.

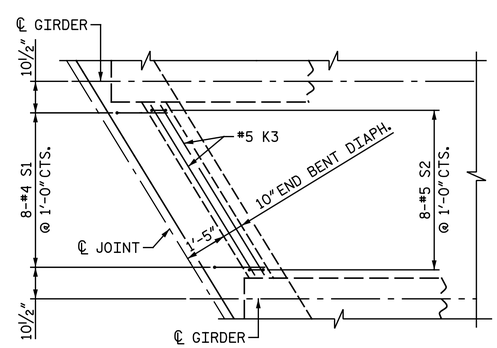

END BENT DIAPHRAGM DETAIL

END BENT 1 SHOWN, END BENT 2 SIMILAR
#8 "K" BARS & #6 K4 NOT SHOWN FOR CLARITY (TYP. EA. BAY)

SPLICE LENGTHS		
BAR SIZE	EPOXY COATED	UNCOATED
#4	2'-0"	1'-9"
#5	2'-6"	2'-2"
#6	3'-0"	2'-7"

NOTES:

FOR REINFORCING STEEL IN CONCRETE BARRIER RAIL, SEE "CONCRETE BARRIER RAIL" SHEET.

FOR DECK POURING SEQUENCE AND LOCATION OF TRANSVERSE CONSTRUCTION JOINTS, SEE "BILL OF MATERIAL" SHEET.

FOR "TRANSVERSE CONSTRUCTION JOINT DETAIL" & "BENT DIAPHRAGM DETAIL", SEE "PLAN OF SPANS" SHEET 2 OF 2.

PROJECT NO. I-5986B
JOHNSTON COUNTY
STATION: 28+39.21 -Y29-

SHEET 1 OF 2

NORTH CAROLINA PROFESSIONAL SEAL 023371 ENGINEER VIPUL A. PATEL

DocuSigned by: Vipul A Patel
AC3E887A79B544D...
4/13/2020

STATE OF NORTH CAROLINA
DEPARTMENT OF TRANSPORTATION
RALEIGH
SUPERSTRUCTURE

PLAN OF SPANS

DOCUMENT NOT CONSIDERED FINAL UNLESS ALL SIGNATURES COMPLETED

Michael Baker INTERNATIONAL
Michael Baker Engineering
8000 Regency Parkway, Suite 600
Cary, North Carolina 27518
NC License No.: F-1084

REVISIONS							SHEET NO.
NO.	BY:	DATE:	NO.	BY:	DATE:		S2-8
1			3				TOTAL SHEETS
2			4				28

DRAWN BY : P. SMITH DATE : 06-25-19
CHECKED BY : V.A. PATEL DATE : 1-27-20