DocuSign Envelope ID: E39631BE-DFCC-4785-830A-726DD6E73D51

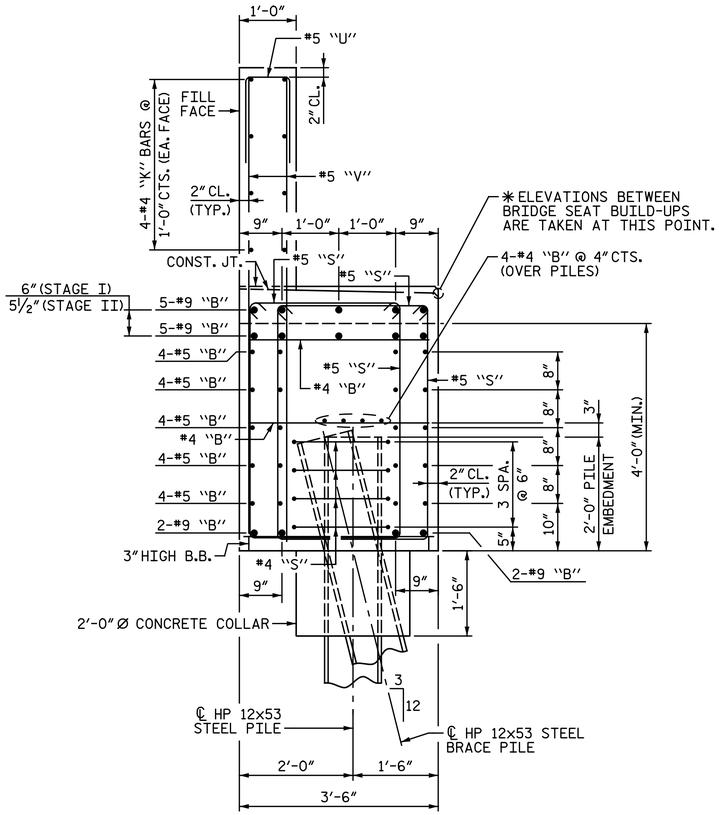

SECTION A-A

BAR TYPES

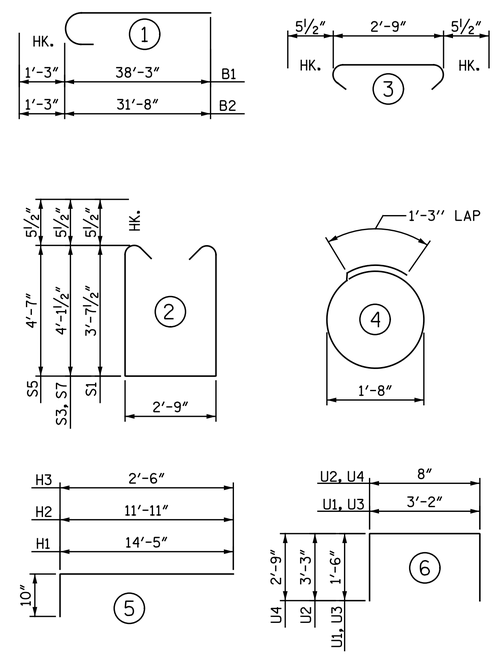

ALL BAR DIMENSIONS ARE OUT TO OUT.

NOTE:

FOR "TEMPORARY DRAINAGE AT END BENT", SEE "END BENT 1 DETAILS" SHEET.

BILL OF MATERIAL

END BENT 2 STAGE I (LEFT SIDE)

BAR	NO.	SIZE	TYPE	LENGTH	WEIGHT
B1	4	#9	1	39' - 6"	537
B2	5	#9	1	32' - 11"	560
B3	5	#9	STR.	15' - 4"	261
B4	5	#4	STR.	9' - 4"	31
B5	5	#4	STR.	4' - 8"	16
B6	20	#5	STR.	40' - 5"	843
B7	4	#4	STR.	39' - 10"	106
B8	13	#4	STR.	3' - 2"	27
H1	8	#5	5	15' - 3"	127
H2	30	#5	5	12' - 9"	399
H3	22	#5	5	3' - 4"	76
K1	8	#4	STR.	39' - 10"	213
S1	64	#5	2	10' - 11"	729
S2	92	#5	3	3' - 8"	352
S3	40	#5	2	11' - 11"	497
S4	24	#4	4	6' - 6"	104
U1	11	#4	6	6' - 2"	45
U2	35	#5	6	7' - 2"	262
V1	70	#5	STR.	7' - 5"	541
V2	32	#5	STR.	9' - 2"	306
V3	2	#5	STR.	3' - 8"	8

REINFORCING STEEL LBS. 6,040

CLASS A CONCRETE
POUR 1 - CAP, COLLARS & LOWER PART OF WING C.Y. 24.0
POUR 2 - BACKWALL & UPPER PART OF WING C.Y. 7.8
TOTAL C.Y. 31.8

PILE DRIVING EQUIPMENT SETUP FOR HP 12x53 STEEL PILES EA. 6

HP 12x53 STEEL PILES NO. 6 LIN. FT. 360

PILE REDRIVES EA. 3

END BENT 2 STAGE I (RIGHT SIDE)

BAR	NO.	SIZE	TYPE	LENGTH	WEIGHT
B1	4	#9	1	39' - 6"	537
B2	5	#9	1	32' - 11"	560
B3	5	#9	STR.	15' - 4"	261
B4	5	#4	STR.	9' - 4"	31
B5	5	#4	STR.	4' - 8"	16
B6	20	#5	STR.	40' - 5"	843
B7	4	#4	STR.	39' - 10"	106
B8	13	#4	STR.	3' - 2"	27
H1	8	#5	5	15' - 3"	127
H2	30	#5	5	12' - 9"	399
H3	22	#5	5	3' - 4"	76
K1	8	#4	STR.	39' - 10"	213
S1	64	#5	2	10' - 11"	729
S2	92	#5	3	3' - 8"	352
S3	40	#5	2	11' - 11"	497
S4	24	#4	4	6' - 6"	104
U1	11	#4	6	6' - 2"	45
U2	35	#5	6	7' - 2"	262
V1	70	#5	STR.	7' - 5"	541
V2	32	#5	STR.	9' - 2"	306
V3	2	#5	STR.	3' - 8"	8

REINFORCING STEEL LBS. 6,040

CLASS A CONCRETE
POUR 1 - CAP, COLLARS & LOWER PART OF WING C.Y. 24.0
POUR 2 - BACKWALL & UPPER PART OF WING C.Y. 7.8
TOTAL C.Y. 31.8

PILE DRIVING EQUIPMENT SETUP FOR HP 12x53 STEEL PILES EA. 6

HP 12x53 STEEL PILES NO. 6 LIN. FT. 360

PILE REDRIVES EA. 3

END BENT 2 STAGE II

BAR	NO.	SIZE	TYPE	LENGTH	WEIGHT
B9	8	#9	STR.	42' - 5"	1,154
B10	10	#9	STR.	12' - 5"	422
B11	10	#9	STR.	40' - 0"	1,360
B12	10	#4	STR.	4' - 4"	29
B13	30	#4	STR.	4' - 8"	94
B14	40	#5	STR.	41' - 7"	1,735
B15	4	#5	STR.	59' - 8"	249
B16	12	#4	STR.	28' - 4"	227
B17	27	#4	STR.	3' - 2"	57
K2	24	#4	STR.	28' - 4"	454
S5	196	#5	2	12' - 10"	2,623
S6	196	#5	3	3' - 8"	750
S7	24	#5	2	11' - 11"	298
S8	48	#4	4	6' - 6"	208
U3	34	#4	6	6' - 2"	140
U4	81	#5	6	6' - 2"	521
V4	162	#5	STR.	8' - 5"	1,422

REINFORCING STEEL LBS. 11,743

CLASS A CONCRETE
POUR 1 - CAP & COLLARS C.Y. 56.1
POUR 2 - BACKWALL C.Y. 11.5
TOTAL C.Y. 67.6

PILE DRIVING EQUIPMENT SETUP FOR HP 12x53 STEEL PILES EA. 12

HP 12x53 STEEL PILES NO. 12 LIN. FT. 720

PILE REDRIVES EA. 6

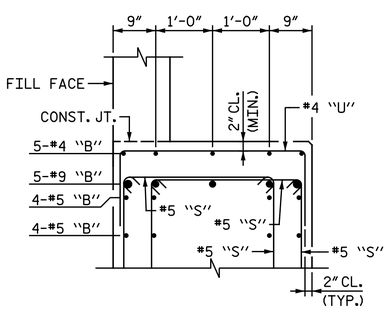

PARTIAL SECTION B-B

"V" & "K" BARS NOT SHOWN FOR CLARITY.

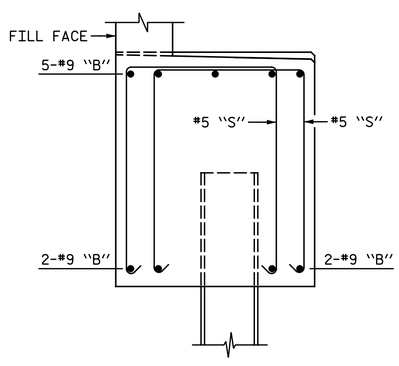

PARTIAL SECTION C-C

ONLY #9 "B" & #5 "S" BARS SHOWN FOR CLARITY. (TYP. EA. PILE)

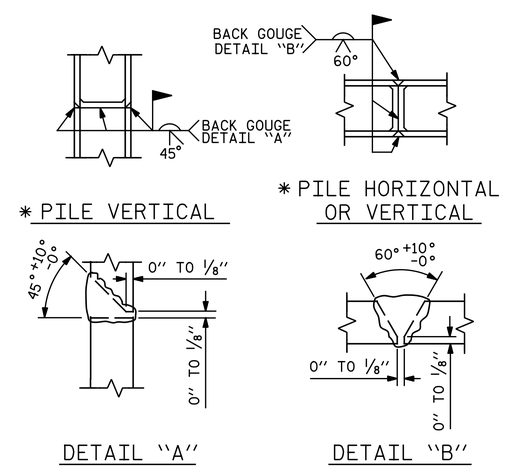

✱ POSITION OF PILE DURING WELDING

PILE SPLICE DETAILS

PROJECT NO. I-5986B
JOHNSTON COUNTY
STATION: 1260+34.00 -L-

SHEET 5 OF 5

STATE OF NORTH CAROLINA
DEPARTMENT OF TRANSPORTATION
RALEIGH

SUBSTRUCTURE

END BENT 2 DETAILS

NORTH CAROLINA PROFESSIONAL SEAL 033139 ENGINEER TODD M. GARRISON

DocuSigned by: Todd M. Garrison 61EAF7523943466...
4/9/2020

DOCUMENT NOT CONSIDERED FINAL UNLESS ALL SIGNATURES COMPLETED

Michael Baker INTERNATIONAL
Michael Baker Engineering
8000 Regency Parkway, Suite 600
Cary, North Carolina 27518
NC License No.: F-1084

REVISIONS							SHEET NO.
NO.	BY:	DATE:	NO.	BY:	DATE:		SI-52
1			3				TOTAL SHEETS
2			4				57

DRAWN BY : C. E. MAYHEW DATE : 8-13-19
CHECKED BY : T. M. GARRISON DATE : 8-16-19