DocuSign Envelope ID: E39631BE-DFCC-4785-830A-726DD6E73D51

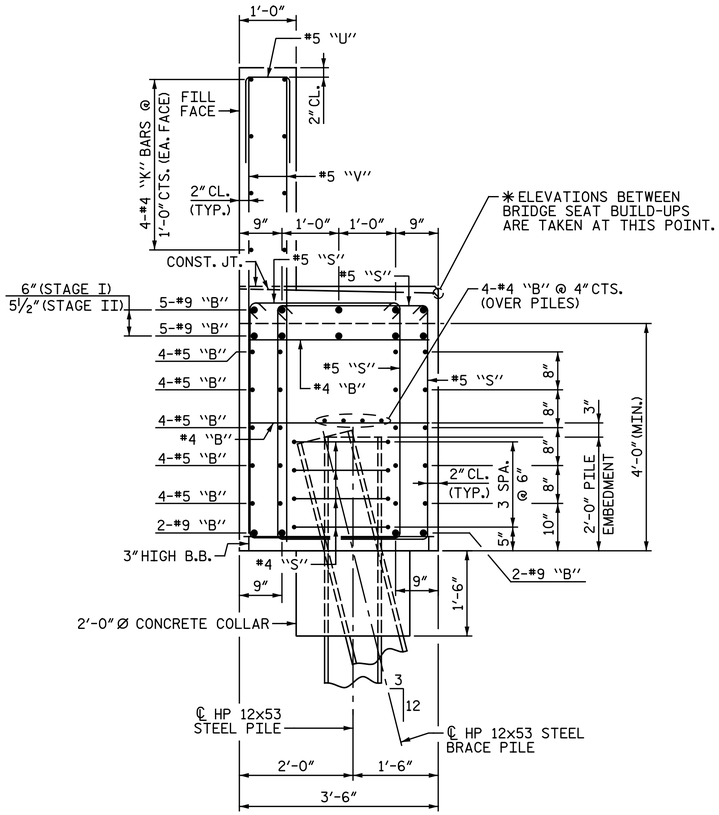

SECTION A-A

BAR TYPES

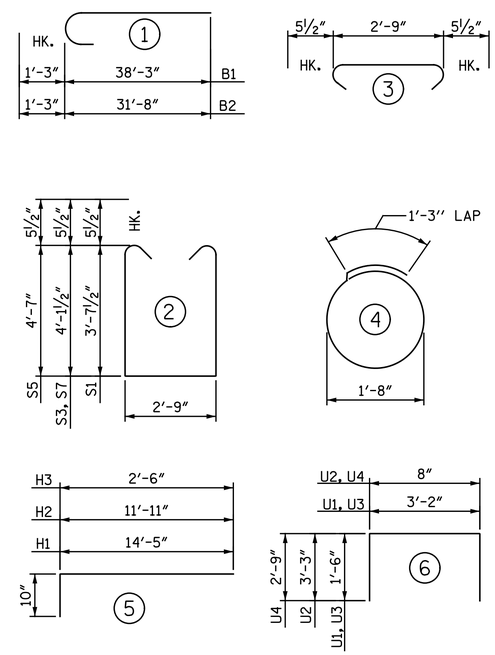

ALL BAR DIMENSIONS ARE OUT TO OUT.

NOTE:

FOR "PILE SPLICE DETAILS", SEE "END BENT 2 DETAILS" SHEET.

BILL OF MATERIAL

END BENT 1 STAGE I (LEFT SIDE)

BAR	NO.	SIZE	TYPE	LENGTH	WEIGHT
B1	4	#9	1	39' - 6"	537
B2	5	#9	1	32' - 11"	560
B3	5	#9	STR.	15' - 4"	261
B4	5	#4	STR.	9' - 4"	31
B5	5	#4	STR.	4' - 8"	16
B6	20	#5	STR.	40' - 5"	843
B7	4	#4	STR.	39' - 10"	106
B8	13	#4	STR.	3' - 2"	27
H1	8	#5	5	15' - 3"	127
H2	30	#5	5	12' - 9"	399
H3	22	#5	5	3' - 4"	76
K1	8	#4	STR.	39' - 10"	213
S1	64	#5	2	10' - 11"	729
S2	92	#5	3	3' - 8"	352
S3	40	#5	2	11' - 11"	497
S4	24	#4	4	6' - 6"	104
U1	11	#4	6	6' - 2"	45
U2	35	#5	6	7' - 2"	262
V1	70	#5	STR.	7' - 5"	541
V2	32	#5	STR.	9' - 2"	306
V3	2	#5	STR.	3' - 8"	8

REINFORCING STEEL LBS. 6,040

CLASS A CONCRETE
POUR 1 - CAP, COLLARS & LOWER PART OF WING C.Y. 24.0
POUR 2 - BACKWALL & UPPER PART OF WING C.Y. 7.8
TOTAL C.Y. 31.8

PILE DRIVING EQUIPMENT SETUP FOR HP 12x53 STEEL PILES EA. 6

HP 12x53 STEEL PILES
NO. 6 LIN. FT. 360

PILE REDRIVES EA. 3

END BENT 1 STAGE I (RIGHT SIDE)

BAR	NO.	SIZE	TYPE	LENGTH	WEIGHT
B1	4	#9	1	39' - 6"	537
B2	5	#9	1	32' - 11"	560
B3	5	#9	STR.	15' - 4"	261
B4	5	#4	STR.	9' - 4"	31
B5	5	#4	STR.	4' - 8"	16
B6	20	#5	STR.	40' - 5"	843
B7	4	#4	STR.	39' - 10"	106
B8	13	#4	STR.	3' - 2"	27
H1	8	#5	5	15' - 3"	127
H2	30	#5	5	12' - 9"	399
H3	22	#5	5	3' - 4"	76
K1	8	#4	STR.	39' - 10"	213
S1	64	#5	2	10' - 11"	729
S2	92	#5	3	3' - 8"	352
S3	40	#5	2	11' - 11"	497
S4	24	#4	4	6' - 6"	104
U1	11	#4	6	6' - 2"	45
U2	35	#5	6	7' - 2"	262
V1	70	#5	STR.	7' - 5"	541
V2	32	#5	STR.	9' - 2"	306
V3	2	#5	STR.	3' - 8"	8

REINFORCING STEEL LBS. 6,040

CLASS A CONCRETE
POUR 1 - CAP, COLLARS & LOWER PART OF WING C.Y. 24.0
POUR 2 - BACKWALL & UPPER PART OF WING C.Y. 7.8
TOTAL C.Y. 31.8

PILE DRIVING EQUIPMENT SETUP FOR HP 12x53 STEEL PILES EA. 6

HP 12x53 STEEL PILES
NO. 6 LIN. FT. 360

PILE REDRIVES EA. 3

END BENT 1 STAGE II

BAR	NO.	SIZE	TYPE	LENGTH	WEIGHT
B9	8	#9	STR.	42' - 5"	1,154
B10	10	#9	STR.	12' - 5"	422
B11	10	#9	STR.	40' - 0"	1,360
B12	10	#4	STR.	4' - 4"	29
B13	30	#4	STR.	4' - 8"	94
B14	40	#5	STR.	41' - 7"	1,735
B15	4	#5	STR.	59' - 8"	249
B16	12	#4	STR.	28' - 4"	227
B17	27	#4	STR.	3' - 2"	57
K2	24	#4	STR.	28' - 4"	454
S5	196	#5	2	12' - 10"	2,623
S6	196	#5	3	3' - 8"	750
S7	24	#5	2	11' - 11"	298
S8	48	#4	4	6' - 6"	208
U3	34	#4	6	6' - 2"	140
U4	81	#5	6	6' - 2"	521
V4	162	#5	STR.	8' - 5"	1,422

REINFORCING STEEL LBS. 11,743

CLASS A CONCRETE
POUR 1 - CAP & COLLARS C.Y. 56.1
POUR 2 - BACKWALL C.Y. 11.5
TOTAL C.Y. 67.6

PILE DRIVING EQUIPMENT SETUP FOR HP 12x53 STEEL PILES EA. 12

HP 12x53 STEEL PILES
NO. 12 LIN. FT. 720

PILE REDRIVES EA. 6

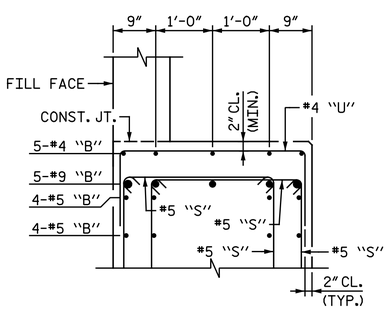

PARTIAL SECTION B-B

"V" & "K" BARS NOT SHOWN FOR CLARITY.

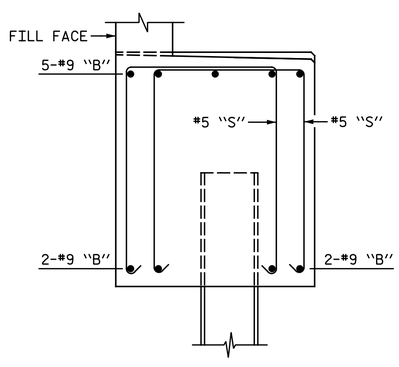

PARTIAL SECTION C-C

ONLY #9 "B" & #5 "S" BARS SHOWN FOR CLARITY. (TYP. EA. PILE)

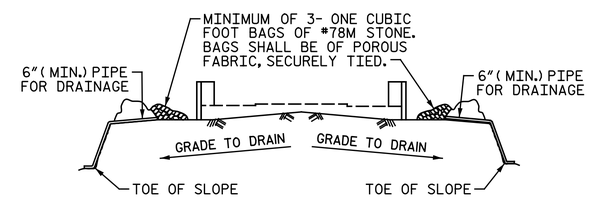

BAGGED STONE AND PIPE SHALL BE PLACED IMMEDIATELY AFTER COMPLETION OF END BENT EXCAVATION. PIPE MAY BE EITHER CONCRETE, CORRUGATED STEEL, CORRUGATED ALUMINUM ALLOY, OR CORRUGATED PLASTIC. PERFORATED PIPE WILL NOT BE ALLOWED.

BAGGED STONE SHALL REMAIN IN PLACE UNTIL THE ENGINEER DIRECTS THAT IT BE REMOVED. THE CONTRACTOR SHALL REMOVE AND DISPOSE OF SILT ACCUMULATIONS AT BAGGED STONE WHEN SO DIRECTED BY THE ENGINEER. BAGS SHALL BE REMOVED AND REPLACED WHENEVER THE ENGINEER DETERMINES THAT THEY HAVE DETERIORATED AND LOST THEIR EFFECTIVENESS.

NO SEPARATE PAYMENT WILL BE MADE FOR THIS WORK AND THE ENTIRE COST OF THIS WORK SHALL BE INCLUDED IN THE UNIT CONTRACT PRICE FOR THE SEVERAL PAY ITEMS.

TEMPORARY DRAINAGE AT END BENT

PROJECT NO. I-5986B
JOHNSTON COUNTY
STATION: 1260+34.00 -L-

SHEET 5 OF 5

STATE OF NORTH CAROLINA
DEPARTMENT OF TRANSPORTATION
RALEIGH

SUBSTRUCTURE

END BENT 1 DETAILS

NORTH CAROLINA PROFESSIONAL SEAL 033139 ENGINEER TODD M. GARRISON

DocuSigned by: Todd M. Garrison
61EAF7523943466...
4/9/2020

DOCUMENT NOT CONSIDERED FINAL UNLESS ALL SIGNATURES COMPLETED

Michael Baker INTERNATIONAL
Michael Baker Engineering
8000 Regency Parkway, Suite 600
Cary, North Carolina 27518
NC License No.: F-1084

REVISIONS								
NO.	BY:	DATE:	NO.	BY:	DATE:			
1			3					
2			4					

SHEET NO. SI-42
TOTAL SHEETS 57

DRAWN BY : C. E. MAYHEW DATE : 7-22-19
CHECKED BY : T. M. GARRISON DATE : 7-29-19