DocuSign Envelope ID: E39631BE-DFCC-4785-830A-726DD6E73D51

NOTES:

FOR "SECTION A-A", "PARTIAL SECTION B-B", AND "PARTIAL SECTION C-C", SEE "END BENT 1 DETAILS" SHEET.

STIRRUPS & "U" BARS IN CAP MAY BE SHIFTED AS NECESSARY TO CLEAR ANCHOR BOLTS.

BACKWALL SHALL BE PLACED BEFORE APPLYING THE EPOXY PROTECTIVE COATING.

THE TOP SURFACE AREAS OF THE END BENT CAP SHALL BE CURED IN ACCORDANCE WITH THE STANDARD SPECIFICATIONS EXCEPT THE MEMBRANE CURING COMPOUND METHOD SHALL NOT BE USED.

THE TOP SURFACE OF THE CAP EXCEPT THE BRIDGE SEAT BUILD-UPS SHALL BE SLOPED TRANSVERSELY FROM THE FILL FACE TO THE BACK FACE AT A RATE OF 2%.

THE CONCRETE IN THE HATCHED AREA OF THE WING SHALL BE POURED AFTER THE BARRIER RAIL IS CAST IF SLIP FORMING IS USED.

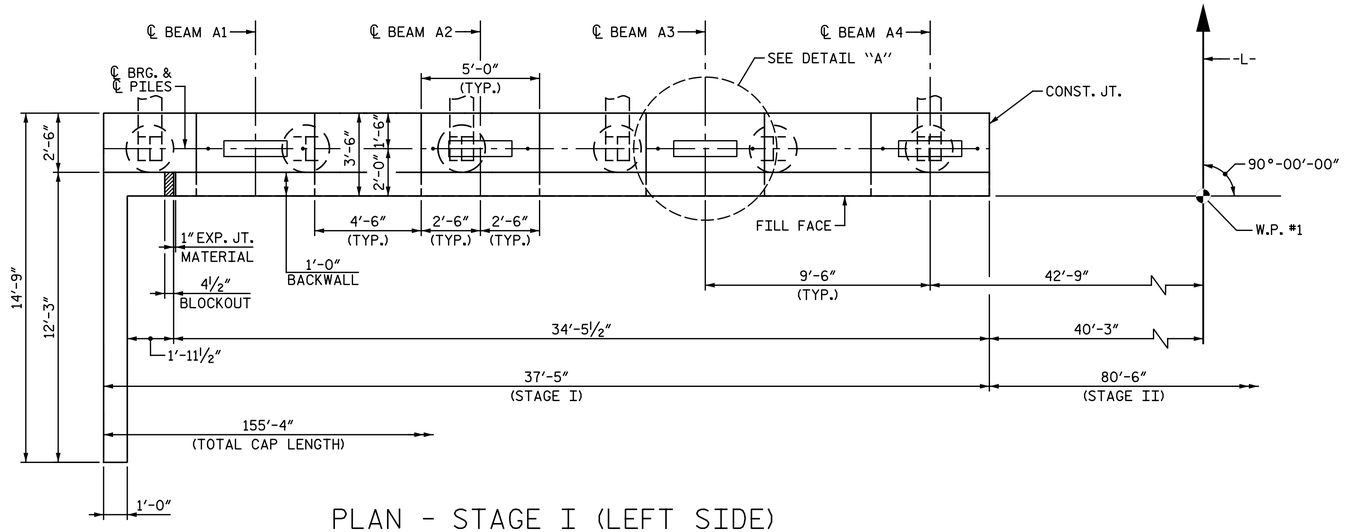

PLAN - STAGE I (LEFT SIDE)

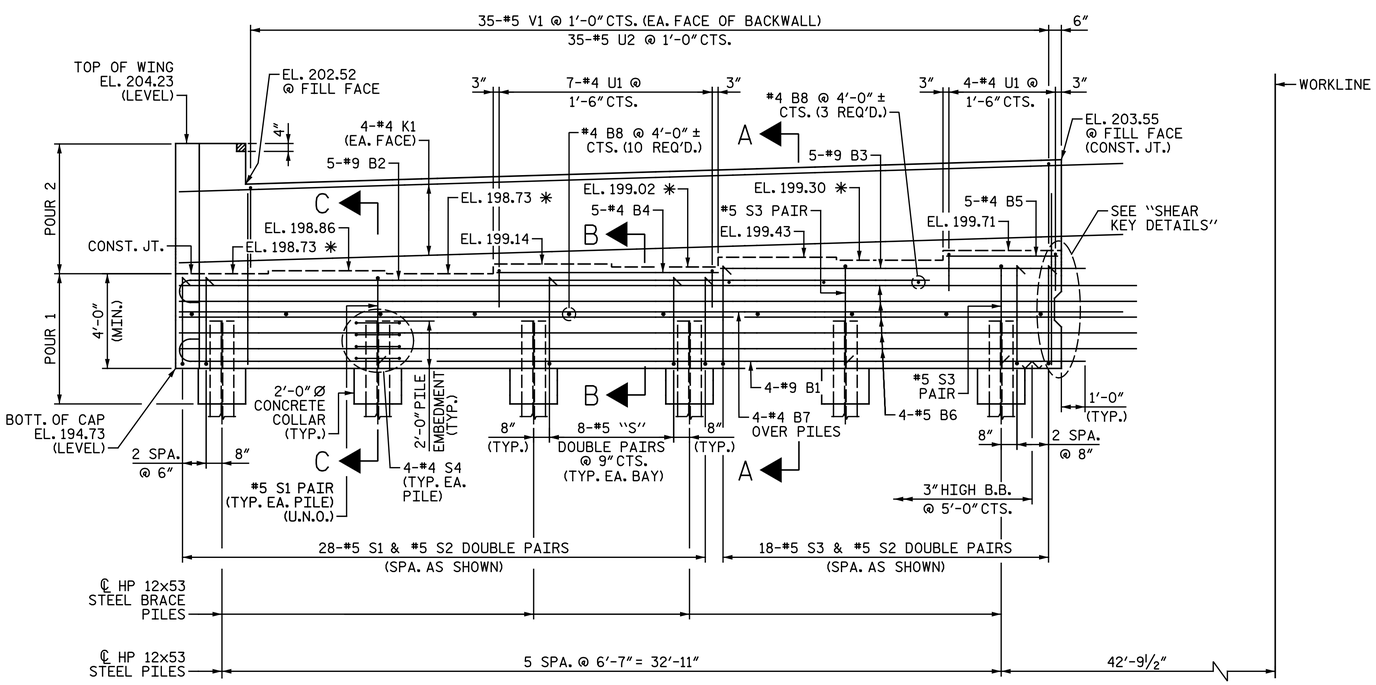

ELEVATION - STAGE I (LEFT SIDE)

✱ FOR LOCATION OF ELEVATIONS BETWEEN BRIDGE SEAT BUILD-UPS, SEE "END BENT 1 DETAILS" SHEET.
U.N.O. DENOTES "UNLESS NOTED OTHERWISE"

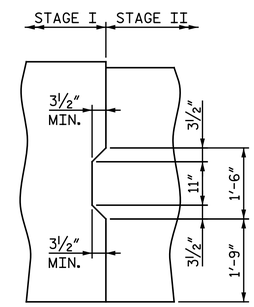

SHEAR KEY DETAILS

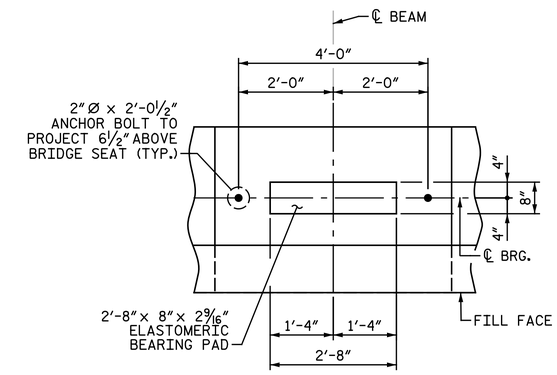

DETAIL "A"

(TYP. EA. BRIDGE SEAT)

PROJECT NO. I-5986B
JOHNSTON COUNTY
STATION: 1260+34.00 -L-

SHEET 1 OF 5

STATE OF NORTH CAROLINA
DEPARTMENT OF TRANSPORTATION
RALEIGH

SUBSTRUCTURE
END BENT 1
STAGE I
(LEFT SIDE)

NORTH CAROLINA PROFESSIONAL SEAL 033139 ENGINEER TODD M. GARRISON

DocuSigned by: Todd M. Garrison
61EAF7523943466...
4/9/2020

DOCUMENT NOT CONSIDERED FINAL UNLESS ALL SIGNATURES COMPLETED

Michael Baker INTERNATIONAL
Michael Baker Engineering
8000 Regency Parkway, Suite 600
Cary, North Carolina 27518
NC License No.: F-1084

REVISIONS								SHEET NO.
NO.	BY:	DATE:	NO.	BY:	DATE:			SI-38
1			3					TOTAL SHEETS
2			4					57

DRAWN BY : C. E. MAYHEW DATE : 7-17-19
CHECKED BY : T. M. GARRISON DATE : 7-29-19