DocuSign Envelope ID: E39631BE-DFCC-4785-830A-726DD6E73D51

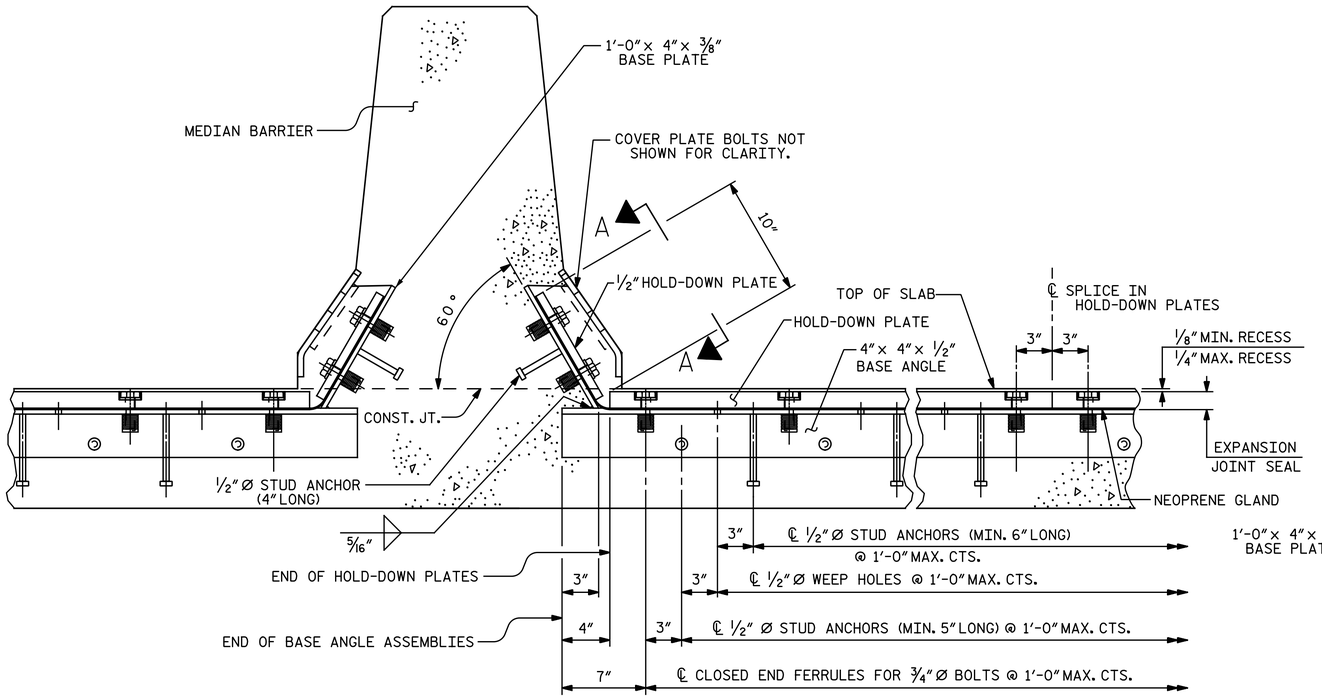

SECTION THRU RAIL NORMAL TO JOINT

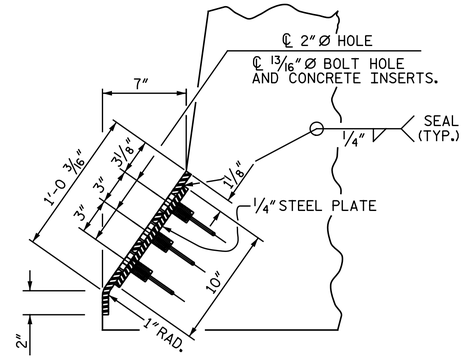

TYPE I-END VIEW

SEE "EXPANSION JOINT SEAL DETAILS FOR BARRIER RAIL" SHEET FOR "CONCRETE INSERT" DETAIL.

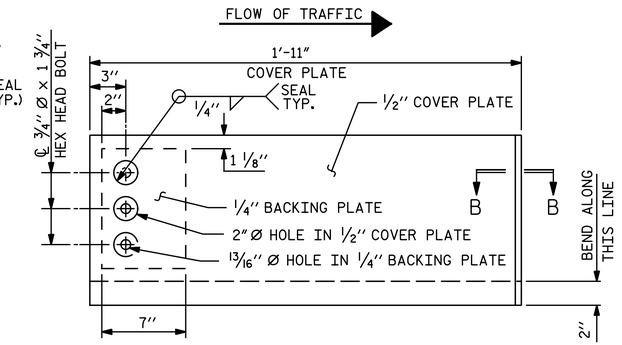

TYPE I - ELEVATION VIEW

(4 REQUIRED)

COVER PLATE DETAILS

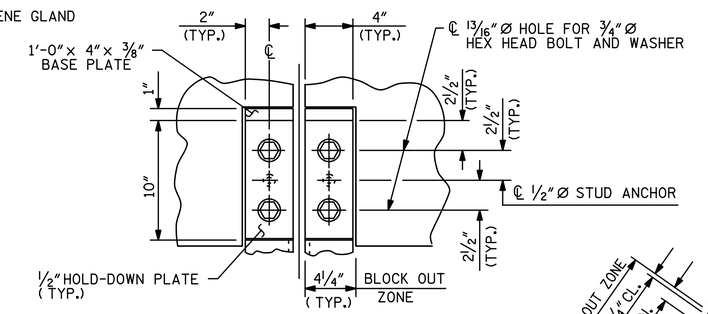

SECTION A - A

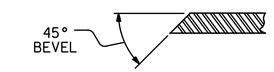

SECTION B - B

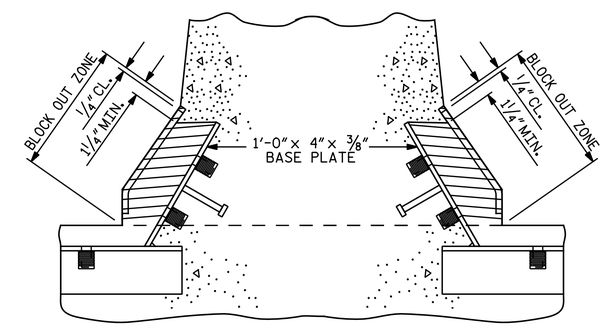

BLOCK OUT DETAIL

SEE " SECTION A - A " FOR OTHER DETAILS.

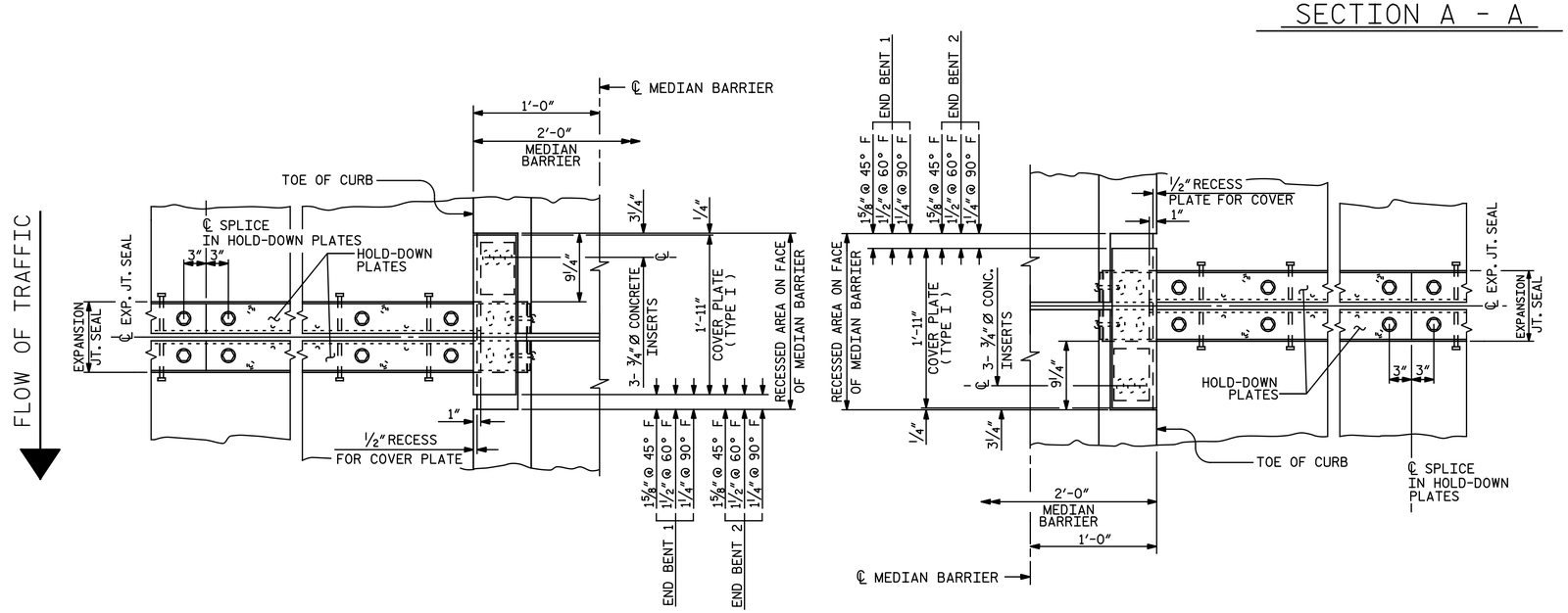

PLAN OF EXPANSION JOINT SEAL

PROJECT NO. I-5986B

JOHNSTON COUNTY

STATION: 1260+34.00 -L-

SHEET 3 OF 3

NORTH CAROLINA PROFESSIONAL SEAL 033139 ENGINEER TODD M. GARRISON

DocuSigned by: Todd M. Garrison 61EAF7523943466...
4/9/2020

DOCUMENT NOT CONSIDERED FINAL UNLESS ALL SIGNATURES COMPLETED

STATE OF NORTH CAROLINA
DEPARTMENT OF TRANSPORTATION
RALEIGH

SUPERSTRUCTURE

EXPANSION JOINT SEAL DETAILS FOR MEDIAN BARRIER

Michael Baker INTERNATIONAL

Michael Baker Engineering
8000 Regency Parkway, Suite 600
Cary, North Carolina 27518
NC License No.: F-1084

REVISIONS								SHEET NO.
NO.	BY:	DATE:	NO.	BY:	DATE:			SI-35
1			3					TOTAL SHEETS
2			4					57

DRAWN BY : N. B. SPEAKS DATE : 6-4-19
CHECKED BY : T. M. GARRISON DATE : 6-10-19