DocuSign Envelope ID: 1C624A43-38D2-4EC3-93A5-1DA004224CBA

PROJECT REFERENCE NO.	SHEET NO.
I-5986B	SIG-8.1

EDI MODEL 2010ECL CONFLICT MONITOR PROGRAMMING DETAIL

(remove jumpers and set switches as shown)

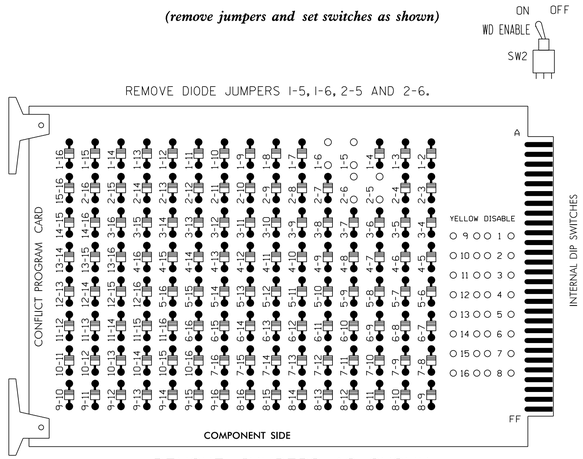

REMOVE JUMPERS AS SHOWN

NOTES:

1. Card is provided with all diode jumpers in place. Removal of any jumper allows its channels to run concurrently.
2. Make sure jumpers SEL2-SEL5 are present on the monitor board.

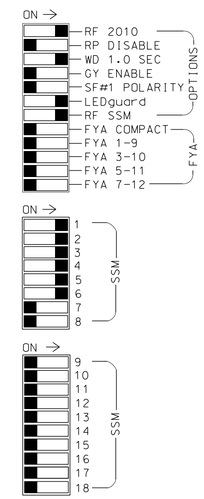

■ = DENOTES POSITION OF SWITCH

NOTES

1. To prevent "flash-conflict" problems, insert red flash program blocks for all unused vehicle load switches in the output file. The installer shall verify that signal heads flash in accordance with the Signal Plans.
2. Program controller to start up in phase 2 Green and 6 Green.
3. If this signal will be managed by an ATMS software, enable controller and detector logging for all enabled detectors.
4. The cabinet and controller are part of Signal System #D04-20 Benson.

EQUIPMENT INFORMATION

CONTROLLER.....2070LX
CABINET.....332
SOFTWARE.....ECONOLITE ASC/3-2070
CABINET MOUNT.....BASE
OUTPUT FILE POSITIONS...12
LOAD SWITCHES USED.....S1,S2,S3,S4,S5,S6
PHASES USED.....1,2,3,4,5,6
OVERLAPS.....NONE

SIGNAL HEAD HOOK-UP CHART

LOAD SWITCH NO.	S1	S2	S2P	S3		S4		S4P	S5	S6	S6P	S7	S8	S8P
PHASE	1	2	2 PED	3		4		4 PED	5	6	6 PED	7	8	8 PED
SIGNAL HEAD NO.	61	21,22	NU	32	33,34	41	42,43	NU	21	61,62	NU	NU	NU	NU
RED	*	128			116	101	101		*	134				
YELLOW		129			117	102	102			135				
GREEN		130			118	103	103			136				
RED ARROW				116										
YELLOW ARROW	126			117					132					
GREEN ARROW	127			118		103			133					

NU = Not Used

* Denotes install load resistor. See load resistor installation detail this sheet.

INPUT FILE POSITION LAYOUT

(front view)

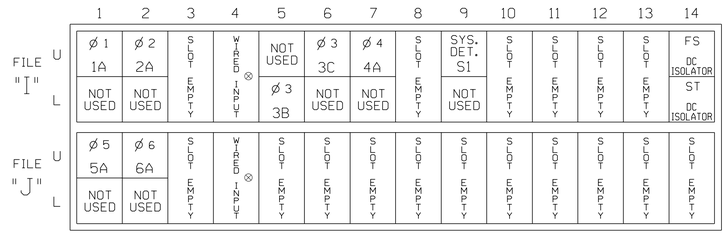

EX.: 1A, 2A, ETC. = LOOP NO.'S

FS = FLASH SENSE
ST = STOP TIME

⊗ Wired Input - Do not populate slot with detector card

INPUT FILE CONNECTION & PROGRAMMING CHART

LOOP NO.	LOOP TERMINAL	INPUT FILE POS.	PIN NO.	DETECTOR NO.	NEMA PHASE	CALL	EXTEND TIME	DELAY TIME	ADDED INITIAL	DETECTOR TYPE
1A [1]	TB2-1,2	I1U	56	1	1	YES		15		N
	-	J4U	48	26	6	YES				N
2A	TB2-5,6	I2U	39	2	2	YES				N
3B	TB4-7,8	I5L	58	3	3	YES				N
3C	TB4-9,10	I6U	41	4	3	YES		5		N
4A	TB6-1,2	I7U	65	34	4	YES				N
5A [2]	TB3-1,2	J1U	55	5	5	YES		15		N
	-	I4U	47	22	2	YES				N
6A	TB3-5,6	J2U	40	6	6	YES				N
* S1	TB6-9,10	I9U	60	11	SYS	NO				N

* System detector only. Remove any assigned vehicle phase.

[1] Add jumper from I1-W to J4-W, on rear of input file.

[2] Add jumper from J1-W to I4-W, on rear of input file.

INPUT FILE POSITION LEGEND: J2L
FILE J
SLOT 2
LOWER

LOAD RESISTOR INSTALLATION DETAIL

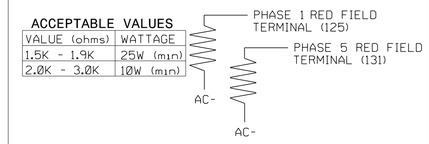

NOTE: The purpose of these resistors is to load the channel red monitor inputs in order for the Signal Sequence Monitor to use the full signal sequence monitoring capability on channels that do not use the red display in the field.

RED MONITOR BOARD PROGRAMMING

(position jumpers as shown below)

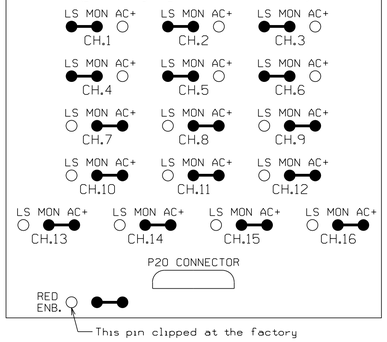

SPECIAL DETECTOR NOTE

For loop 4B, install a loop emulation detection system for vehicle detection. Perform installation according to manufacturer's directions and NCDOT engineer-approved mounting locations to accomplish the detection schemes shown on the Signal Design Plans.

THIS ELECTRICAL DETAIL IS FOR
THE SIGNAL DESIGN: 04-0209T1
DESIGNED: March 2021
SEALED: 04/26/2021
REVISED: N/A

Michael Baker
INTERNATIONAL
8000 Regency Pkwy, Ste. 600, Cary, NC 27518
Phone: (919) 463-5490 · MBAKERINTL.COM
NC License No. : F-1084

Electrical Detail - Sheet 1 of 3 - Temp 1

DOCUMENT NOT CONSIDERED FINAL UNLESS ALL SIGNATURES COMPLETED

ELECTRICAL AND PROGRAMMING DETAILS FOR:

Prepared for: Mobility and Safety Division, Traffic Engineering & Signals Management, Transportation Mobility and Safety Division, NC DEPARTMENT OF TRANSPORTATION

750 N.Greenfield Pkwy,Garner,NC 27529

NC 50-242 (Main St)
at
I-95 NB Ramps/S Walton Dr

Division 4 Johnston County Benson

PLAN DATE: March 2021	REVIEWED BY: W M Yalch
PREPARED BY: K M Cory	REVIEWED BY:

REVISIONS	INIT.	DATE

SEAL
NORTH CAROLINA PROFESSIONAL SEAL 038970 ENGINEER KELLY M CORY

DocuSigned by: Kelly M Cory E2F270FFB1C142E... 4/26/2021
SIGNATURE DATE

SIG. INVENTORY NO. 04-0209T1

$$$$$$SYSTIME$$$$$$
$$$$$$SYSTIME$$$$$$
$$$$$$SYSTIME$$$$$$