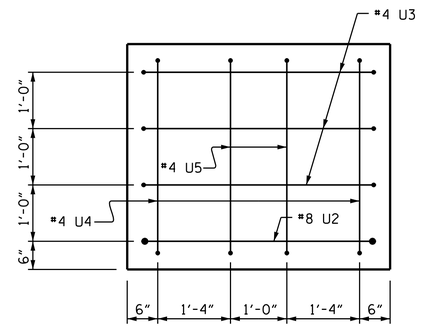

END VIEW

BAR TYPES

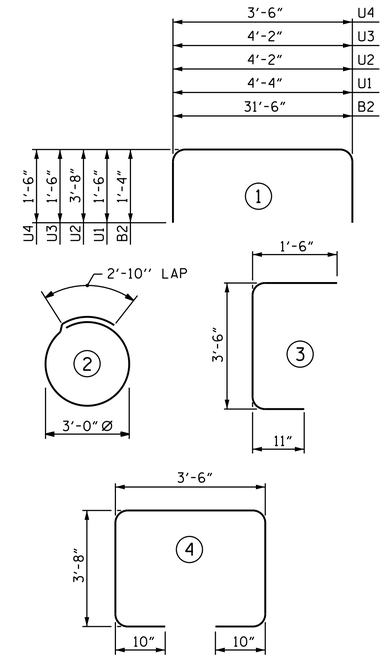

ALL BAR DIMENSIONS ARE OUT TO OUT.

BILL OF MATERIAL

BENT #24

BAR	NO.	SIZE	TYPE	LENGTH	TOTAL LENGTH
B1	10	#8	STR	31'-8"	316'-8"
B2	18	#8	1	34'-2"	615'-0"
B3	6	#5	STR	31'-8"	190'-0"
B4	8	#5	STR	4'-4"	34'-8"
B5	12	#5	STR	4'-6"	54'-0"
S1	88	#5	4	12'-6"	1100'-0"
S2	20	#5	2	12'-3"	245'-0"
U1	32	#4	1	7'-4"	234'-8"
U2	2	#8	1	11'-6"	23'-0"
U3	6	#4	1	7'-2"	43'-0"
U4	4	#4	1	6'-6"	26'-0"
U5	4	#4	3	5'-11"	23'-8"

TOTAL LIN. FT. # 4 BARS	327.3
TOTAL LIN. FT. # 5 BARS	1623.7
TOTAL LIN. FT. # 8 BARS	954.7

GLASS FIBER REINFORCED POLYMER BARS TOTAL 2905.67 LIN. FT.

CLASS AA CONCRETE BREAKDOWN

POUR #1 CAP	20.6 C.Y.
TOTAL CLASS AA CONCRETE	20.6 C.Y.

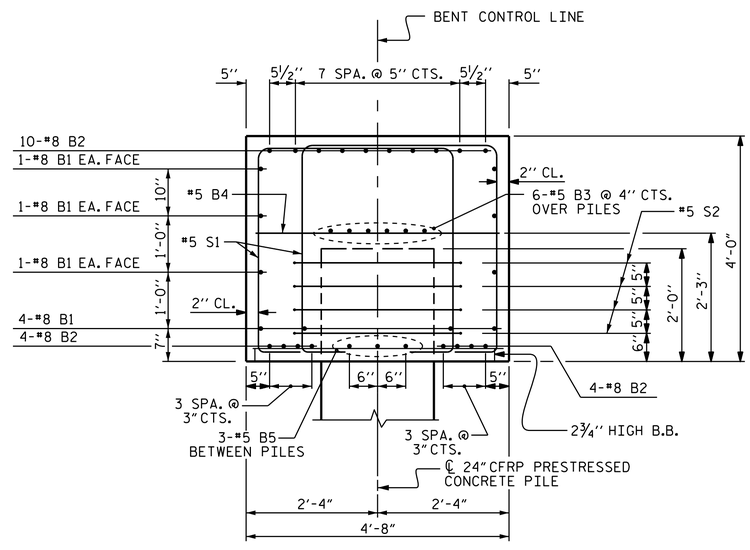

SECTION A-A

PROJECT NO. B-4863

CARTERET COUNTY

STATION: 34+75.00 -L-

SHEET 2 OF 2

NORTH CAROLINA PROFESSIONAL SEAL 035451 ENGINEER ASHVIN K. PATEL

DocuSigned by: Ashvin Patel 7F189E5610244D3...

4/16/2021

DOCUMENT NOT CONSIDERED FINAL UNLESS ALL SIGNATURES COMPLETED

STATE OF NORTH CAROLINA
DEPARTMENT OF TRANSPORTATION
RALEIGH

SUBSTRUCTURE

BENT #24

REVISIONS						SHEET NO.
NO.	BY:	DATE:	NO.	BY:	DATE:	S1-180
1			3			TOTAL SHEETS
2			4			194

DRAWN BY :	T.L. AVERETTE	DATE :	02/2019
CHECKED BY :	A. K. PATEL	DATE :	12/2019
DESIGN ENGINEER OF RECORD:	A. K. PATEL	DATE :	12/2019

13-APR-2021 11:35
S:\DEV\Squad_D\B4863\Plans\FINAL PLANS\B-4863_SMU_B24.dgn
akpatel