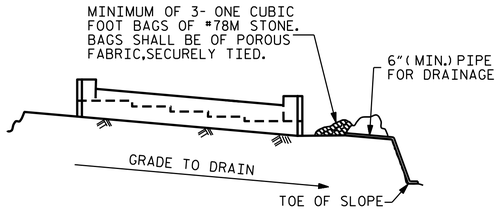

BAGGED STONE AND PIPE SHALL BE PLACED IMMEDIATELY AFTER COMPLETION OF END BENT EXCAVATION. PIPE MAY BE EITHER CONCRETE, CORRUGATED STEEL, CORRUGATED ALUMINUM ALLOY, OR CORRUGATED PLASTIC. PERFORATED PIPE WILL NOT BE ALLOWED.

BAGGED STONE SHALL REMAIN IN PLACE UNTIL THE ENGINEER DIRECTS THAT IT BE REMOVED. THE CONTRACTOR SHALL REMOVE AND DISPOSE OF SILT ACCUMULATIONS AT BAGGED STONE WHEN SO DIRECTED BY THE ENGINEER. BAGS SHALL BE REMOVED AND REPLACED WHENEVER THE ENGINEER DETERMINES THAT THEY HAVE DETERIORATED AND LOST THEIR EFFECTIVENESS.

NO SEPARATE PAYMENT WILL BE MADE FOR THIS WORK AND THE ENTIRE COST OF THIS WORK SHALL BE INCLUDED IN THE UNIT CONTRACT PRICE BID FOR THE SEVERAL PAY ITEMS.

TEMPORARY DRAINAGE AT END BENT

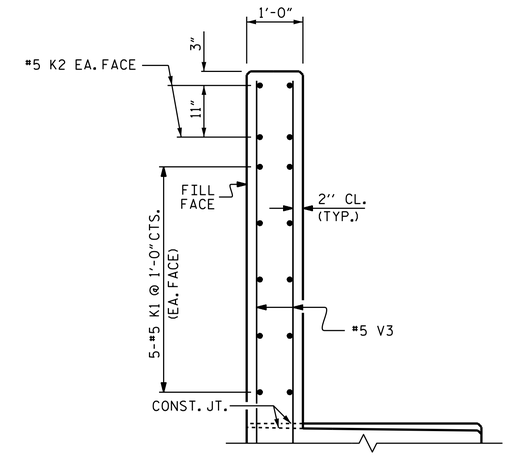

PARTIAL SECTION C-C

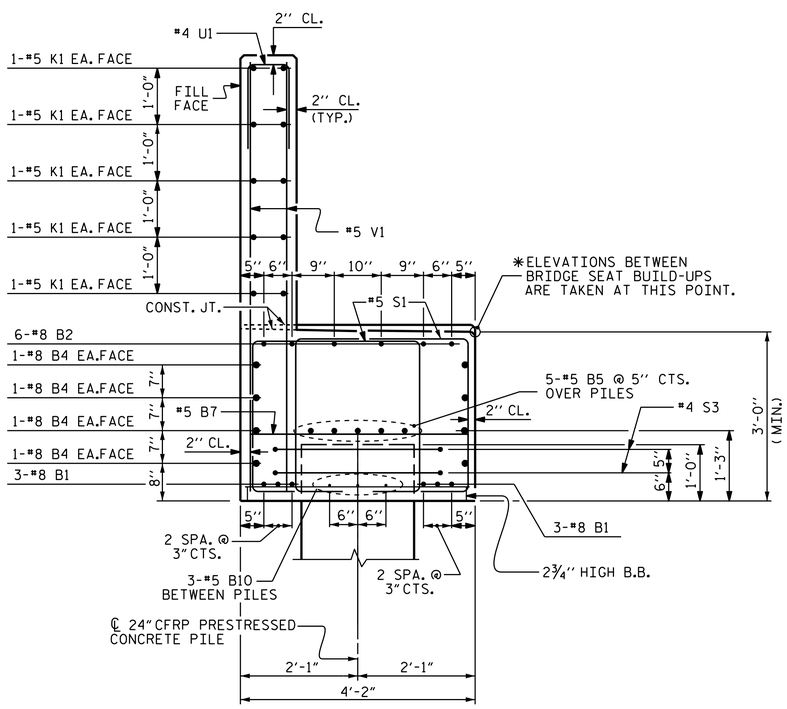

SECTION A-A

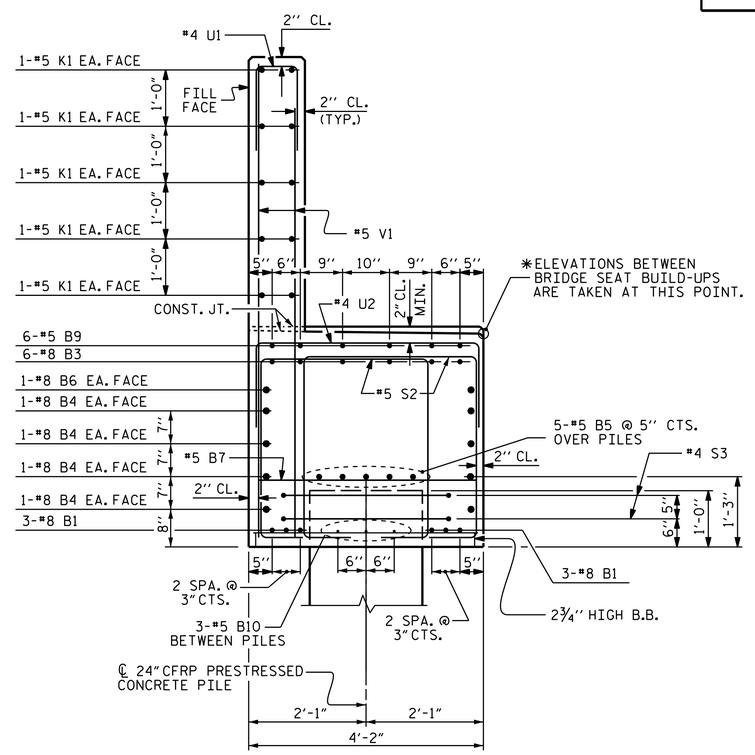

SECTION B-B

BAR TYPES

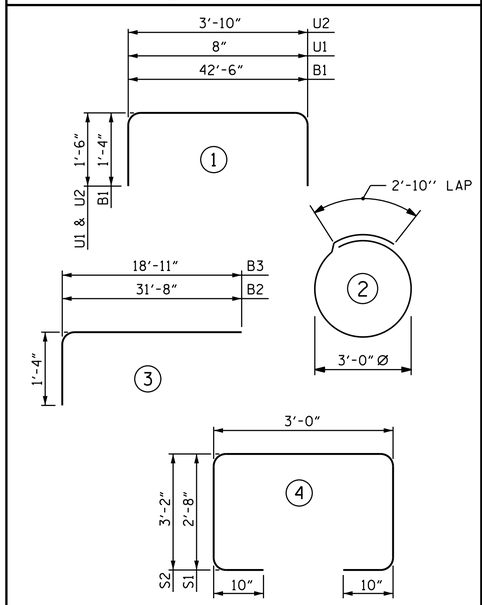

ALL BAR DIMENSIONS ARE OUT TO OUT.

BILL OF MATERIAL
END BENT #1

BAR	NO.	SIZE	TYPE	LENGTH	TOTAL LENGTH
B1	6	#8	1	45'-2"	271'-0"
B2	6	#8	3	33'-0"	198'-0"
B3	6	#8	3	20'-3"	121'-6"
B4	8	#8	STR	42'-8"	341'-4"
B5	5	#5	STR	42'-8"	213'-4"
B6	2	#8	STR	18'-11"	37'-10"
B7	13	#5	STR	3'-10"	49'-10"
B8	6	#5	STR	8'-9"	52'-6"
B9	6	#5	STR	10'-2"	61'-0"
B10	15	#5	STR	5'-5"	81'-3"
E1	32	#5	STR	3'-8"	117'-4"
K1	10	#5	STR	42'-8"	426'-8"
K2	8	#5	STR	4'-5"	35'-4"
S1	60	#5	4	10'-0"	600'-0"
S2	46	#5	4	11'-0"	506'-0"
S3	12	#4	2	12'-3"	147'-0"
U1	34	#4	1	3'-8"	124'-8"
U2	13	#4	1	6'-10"	88'-10"
V1	68	#5	STR	7'-3"	493'-0"
V2	12	#5	STR	9'-10"	118'-0"
V3	12	#5	STR	8'-11"	107'-0"

TOTAL LIN. FT. # 4 BARS	360.5
TOTAL LIN. FT. # 5 BARS	2861.2
TOTAL LIN. FT. # 8 BARS	969.7
GLASS FIBER REINFORCED POLYMER BARS TOTAL	4191.42 LIN. FT.

CLASS AA CONCRETE BREAKDOWN

POUR #1 CAP	21.7 C.Y.
POUR #2 BACKWALL & UPPER PART OF WINGS	8.0 C.Y.
TOTAL CLASS AA CONCRETE	29.7 C.Y.

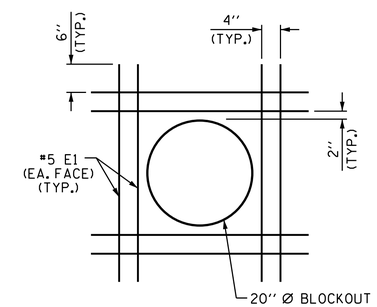

DETAIL OF REINFORCING AROUND 16" Ø PIPE

PROJECT NO. B-4863
CARTERET COUNTY
STATION: 34+75.00 -L-

SHEET 2 OF 2

STATE OF NORTH CAROLINA
DEPARTMENT OF TRANSPORTATION
RALEIGH

SUBSTRUCTURE

END BENT #1

NORTH CAROLINA PROFESSIONAL SEAL 035451 ENGINEER ASHVIN K. PATEL

DocuSigned by: Ashvin Patel
7F189E561024 4D3...
4/16/2021

DOCUMENT NOT CONSIDERED FINAL UNLESS ALL SIGNATURES COMPLETED

REVISIONS						SHEET NO.
NO.	BY:	DATE:	NO.	BY:	DATE:	S1-122
1			3			TOTAL SHEETS
2			4			194

DRAWN BY : T.L. AVERETTE DATE : 12/2018
CHECKED BY : A.K. PATEL DATE : 11/2019
DESIGN ENGINEER OF RECORD: A.K. PATEL DATE : 11/2019

13-APR-2021 11:34
S:\DEV\Squad_D\B4863\Plans\FINAL PLANS\B-4863_SMU_E1.dgn
akpatel