DocuSign Envelope ID: 298FF5ED-1578-4C5D-8EBD-DAA267E00380

PROJECT REFERENCE NO.	SHEET NO.
U-5942	Sig. 11.4

ECONOLITE ASC/3-2070 RAILROAD PREEMPT PROGRAMMING DETAIL

(program controller as shown)

1. From Main Menu select [4. PREEMPTOR/TSP]
2. From PREEMPTOR/TSP/SCP Submenu select [1. PREEMPT PLAN 1-10]

Place cursor in [ ] next to Preempt Plan and press 1. Then press the right cursor arrow and toggle the controller to YES. Next cursor down. This will select Railroad Preempt #1.

```
PREEMPT PLAN [  1]    ENABLE....YES
 VEH/PED 1 2 3 4 5 6 7 8 9 0 1 2 3 4 5 6
 OVERLAP A B C D E F G H I J K L M N O P
TRKCLR V . . . X . . X . . . . . . . . .
TRKCLR O .F1 .F1. . . . . . . . . . . .
ENA TRL  . . . . . . . . . . . . . . . .
DWEL VEH . . . . . . . . . . . . . . . .
DWEL PED . . . . . . . . . . . . . . . .
DWEL OLP . . . . . . . . . . . . . . . .
CYC VEH  X X X . . X . . . . . . . . . .
CYC PED  . . . . . . . . . . . . . . . .
CYC OLP  . . . . . . . . . . . . . . . .
EXIT PH  . . . X . . X . . . . . . . . .
EXIT CAL . . . . . . . . . . . . . . . .
SP FUNC  . . . . . . . . . . . . . . . .

ENABLE... YES|PMT OVRIDE.X|INTERLOCK. NO
DET LOCK... X|DELAY..    0|INHIBIT...  0
OVERIDE FL. .|DURATION   0|CLR-GRN... NO
TERM OLP.  NO|PC>YEL    NO|TERM PH    NO
PED DARK.. NO|TC RESRV YES|DWELL FL  OFF
LINK PMT....0|X FLCOLR RED|EXIT OPT. OFF
X TMG PLN...0|RE-SERV..  0|FLT TYPE.HARD
FREE DUR PMT|R1  NO|R2  NO|R3  NO|R4  NO
--TIMING-----WALK|PED CLIMN GR| YEL| RED
ENTRANCE TM.  255|   255|    1|25.5|25.5
-----------MIN GR|EXT GR|MX GR| YEL| RED
TRACK CLEAR     7|     0|    0|25.5|25.5
-----------MIN DL|PMTEXTIMX TM| YEL| RED
DWL/CYC-EXIT   12|   0.0|    0|25.5|25.5
PMT ACTIVE OUT..ON   PMT ACT DWELL...NO
OTHER - PRI PMT.OFF  NON-PRI PMT.....OFF
INH EXT TIME... 0.0  PED PR RETURN...OFF
PRIORITY RETURN.OFF  QUEUE DELAY.... OFF
COND DELAY......OFF
PHASES      1   2   3   4   5   6   7   8
PR RTN%     0   0   0   0   0   0   0   0
PHASES      9  10  11  12  13  14  15  16
PR RTN%     0   0   0   0   0   0   0   0
```

NOTICE DWL/CYC-EXIT IS ADJUSTED TO 12 →

RAILROAD PREEMPTION WIRING DETAIL

(wire as shown below)

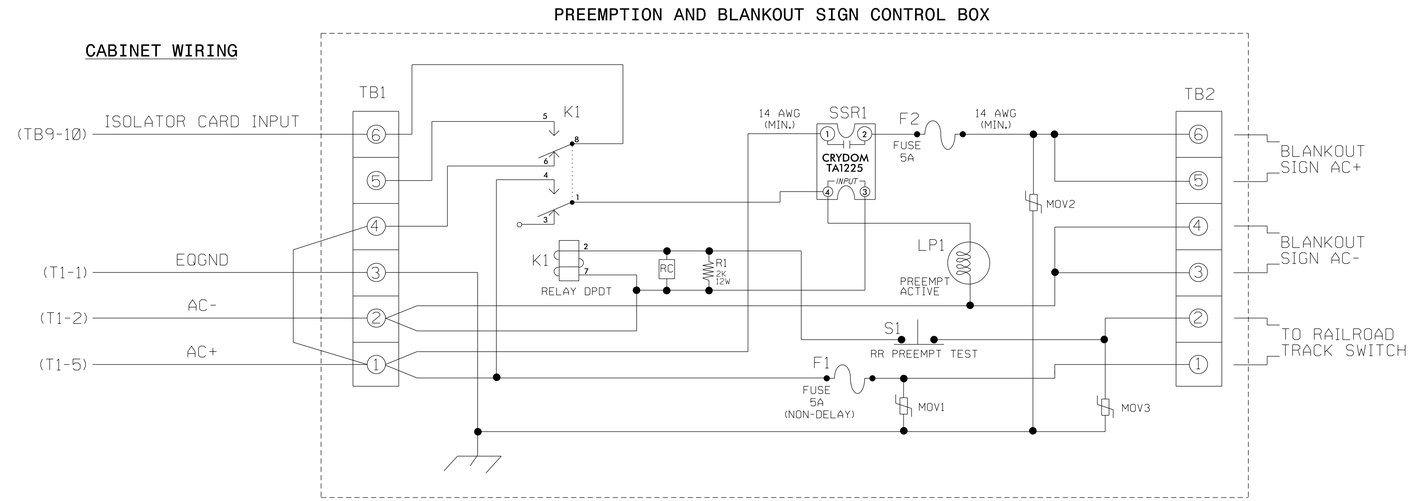

NOTES

1. Relay K1 is shown in the energized (Preempt not active) normal operation state.
2. Relay K1 is an enclosed DPDT general purpose relay with a 12 OVAC coil, 10A contacts and octal style plug.
3. Relay SSR1 is a SPST (normally open) Solid State Relay with AC input and AC (25 amp) output.
4. AC Isolator Card shall activate preemption upon removal of AC+ from the input (as shown above). To accomplish this set invert dip switch on AC Isolator Card.

5. IMPORTANT!! Terminal TB9-12 (on input panel) shall be connected to AC neutral (jumper may have to be added).

FRONT VIEW

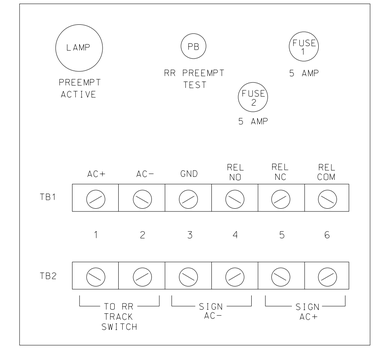

PREEMPT 1 AC ISOLATOR (MODEL 252) OUTPUT PROGRAMMING DETAIL

(set DIP switches as shown below)

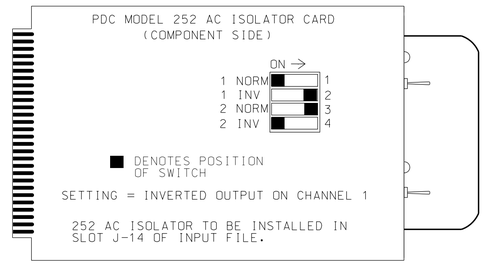

NOTE: IF ANOTHER MANUFACTURER TYPE OF AC ISOLATOR IS USED, OUTPUT PROGRAMMING IS LIKELY NOT TO EQUATE TO THAT SHOWN ABOVE.

THIS ELECTRICAL DETAIL IS FOR
THE SIGNAL DESIGN: 01-0013
DESIGNED: MARCH 2018
SEALED: 08/21/2018
REVISED: N/A

Electrical Detail - Sheet 4 of 4

DOCUMENT NOT CONSIDERED FINAL UNLESS ALL SIGNATURES COMPLETED

ELECTRICAL AND PROGRAMMING DETAILS FOR:

Prepared for the Offices of:
Transportation Mobility and Safety Division
Department of Transportation
Signals Management Section
750 N.Greenfield Pkwy,Garner,NC 27529

US 17 (Hughes Blvd.)
at
SR 1309 (W. Main St.)/
W. Main St.

Division 1 Pasquotank County Elizabeth City

PLAN DATE:	March 2018	REVIEWED BY:	AJ Davis
PREPARED BY:	DJ White	REVIEWED BY:	LM Moon

REVISIONS	INIT.	DATE

SEAL
NORTH CAROLINA PROFESSIONAL SEAL 022516 ENGINEER LISA M. MOON

DocuSigned by: Lisa M Moon 9/20/2018
68CE58DD8D0421...
DATE

SIG. INVENTORY NO. 01-0013

Plans Prepared By:
DRMP
DRMP, Inc.
8000 Regency Parkway, Suite 175
Cary, NC 27518
NC License No. C-2213 (919) 650-1038

20-SEP-2018 19:49
R:\u5942_sig_plans\Design\Wiring\01-0013-20180821e.dgn
lmoon AT CAR-LMOON1-WT