DocuSign Envelope ID: 833D0891-5EE2-48A8-9C32-98B275F664F4

GROOVING BRIDGE FLOORS	
APPROACH SLABS	2,107 SQ.FT.
BRIDGE DECK	9,904 SQ.FT.
TOTAL	12,011 SQ.FT.

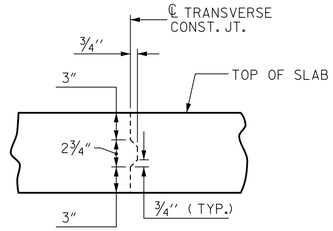

TRANSVERSE CONSTRUCTION JOINT DETAIL

NOTE: REINFORCING STEEL IN SLAB NOT SHOWN. LONGITUDINAL REINFORCING STEEL SHALL BE CONTINUOUS THRU JOINT

BAR TYPES

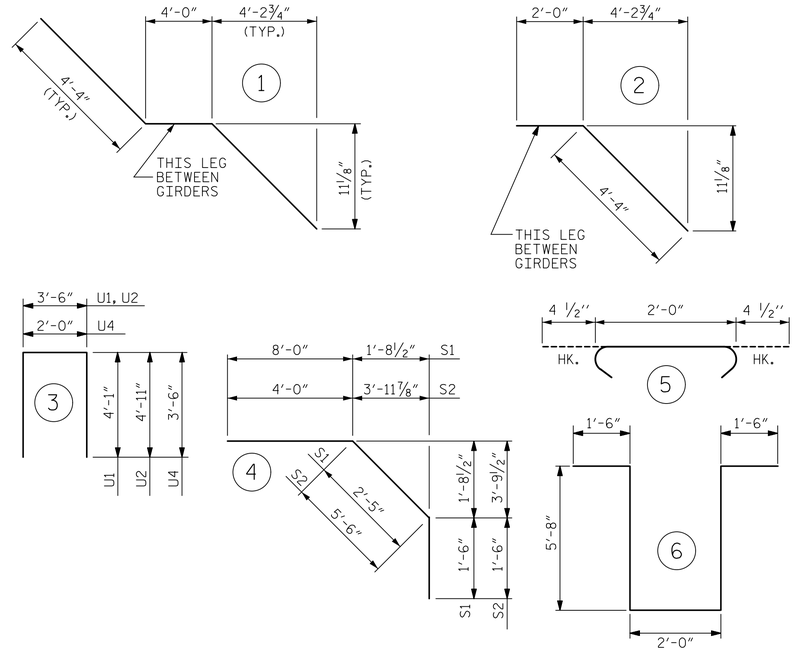

BILL OF MATERIAL

BAR	No.	SIZE	TYPE	LENGTH	WEIGHT
✳ A1	384	5	STR	48'-9"	19525
A2	384	5	STR	48'-9"	19525
✳ A101	2	5	STR	1'-3"	3
✳ A102	2	5	STR	5'-6"	11
✳ A103	2	5	STR	9'-10"	21
✳ A104	2	5	STR	14'-2"	30
✳ A105	2	5	STR	18'-5"	38
✳ A106	2	5	STR	22'-9"	47
✳ A107	2	5	STR	27'-0"	56
✳ A108	2	5	STR	31'-5"	66
✳ A109	2	5	STR	35'-8"	74
✳ A110	2	5	STR	40'-0"	83
✳ A111	2	5	STR	44'-4"	92
A201	2	5	STR	1'-3"	3
A202	2	5	STR	5'-6"	11
A203	2	5	STR	9'-10"	21
A204	2	5	STR	14'-2"	30
A205	2	5	STR	18'-5"	38
A206	2	5	STR	22'-9"	47
A207	2	5	STR	27'-0"	56
A208	2	5	STR	31'-5"	66
A209	2	5	STR	35'-8"	74
A210	2	5	STR	40'-0"	83
A211	2	5	STR	44'-4"	92
✳ B1	105	4	STR	27'-4"	1917
✳ B2	68	6	STR	26'-6"	2707
✳ B3	101	6	STR	28'-5"	4311
✳ B4	64	6	STR	34'-9"	3340
✳ B5	105	4	STR	26'-11"	1888
B6	168	5	STR	52'-10"	9258
✳ B7	27	4	STR	27'-6"	496
✳ G1	153	4	STR	3'-0"	307

BAR	No.	SIZE	TYPE	LENGTH	WEIGHT
K1	24	4	STR	28'-6"	457
K2	8	4	STR	8'-0"	43
K3	32	4	STR	9'-8"	207
K4	8	4	STR	6'-8"	36
K5	4	4	STR	2'-2"	6
K6	16	4	STR	3'-0"	32
K7	4	4	STR	1'-6"	4
K8	8	4	STR	8'-0"	43
K9	32	4	STR	9'-8"	207
K10	8	4	STR	6'-8"	36
K11	12	4	2	6'-4"	51
K12	18	4	1	12'-8"	152
✳ S1	60	4	4	11'-11"	478
✳ S2	60	4	4	11'-0"	441
S3	164	4	5	2'-9"	301
U1	64	4	3	11'-8"	499
U2	10	4	3	13'-4"	89
U3	28	4	6	16'-4"	305
U4	8	4	3	9'-0"	48

REINFORCING STEEL 31,820 LBS.

✳EPOXY COATED REINF. STEEL 35,931 LBS.

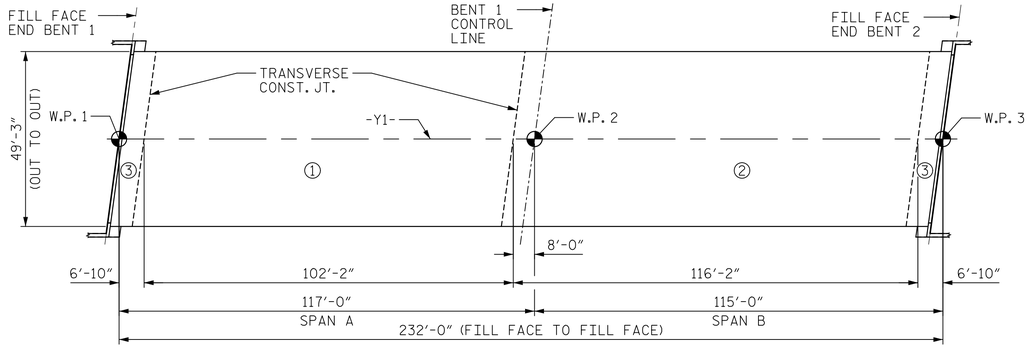

LAYOUT FOR COMPUTING AREA OF REINFORCED CONCRETE DECK SLAB & POUR SEQUENCE (SQ. FT. = 11,343)

SUPERSTRUCTURE BILL OF MATERIAL

	CLASS AA CONCRETE	REINFORCING STEEL	EPOXY COATED REINFORCING STEEL
	(CU. YDS.)	(LBS.)	(LBS.)
SPANS A, B		31,820	35,931
POUR #1	156.3		
POUR #2	196.1		
POUR #3	90.5		
CONC. ISLAND✳	12.7		
TOTALS✳✳	455.6		

✳ONLY MONOLITHIC CONCRETE ISLAND QUANTITIES ON BRIDGE DECK INCLUDED

✳✳QUANTITIES FOR BARRIER RAIL ARE NOT INCLUDED

SUPERSTRUCTURE REINFORCING STEEL LENGTHS ARE BASED ON THE FOLLOWING MINIMUM SPLICE LENGTHS

BAR SIZE	SUPERSTRUCTURE EXCEPT APPROACH SLABS, PARAPET, AND BARRIER RAIL		APPROACH SLABS		PARAPET AND BARRIER RAIL
	EPOXY COATED	UNCOATED	EPOXY COATED	UNCOATED	
#4	2'-0"	1'-9"	2'-0"	1'-9"	2'-9"
#5	2'-6"	2'-2"	2'-6"	2'-2"	3'-5"
#6	3'-0"	2'-7"	3'-10"	2'-7"	4'-4"
#7	5'-3"	3'-6"			
#8	6'-10"	4'-7"			

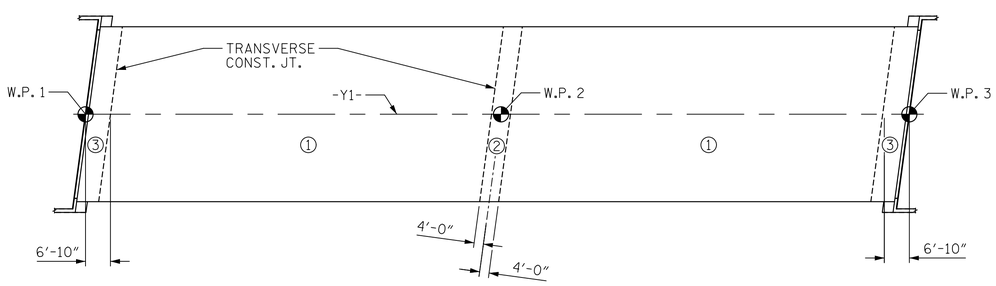

OPTIONAL POURING SEQUENCE

PROJECT NO. B-5980

NASH COUNTY

STATION: 42+56.82 -Y1-

AECOM
AECOM TECHNICAL SERVICES OF NC, INC.
701 CORPORATE CENTER DRIVE, SUITE 475
RALEIGH, NC 27607
(919) 854-6200 www.aecom.com
AECOM License No. F-0342

6/21/2019
NORTH CAROLINA PROFESSIONAL SEAL 030474 ENGINEER JOHN C. MORRISON
DocuSigned by: John C. Morrison
A2FDE142CB2F4AB...

STATE OF NORTH CAROLINA
DEPARTMENT OF TRANSPORTATION
RALEIGH

SUPERSTRUCTURE

BILL OF MATERIAL

REVISIONS						
NO.	BY:	DATE:	NO.	BY:	DATE:	
1			3			
2			4			

SHEET NO. S-21

TOTAL SHEETS 33

DOCUMENT NOT CONSIDERED FINAL UNLESS ALL SIGNATURES COMPLETED

DRAWN BY :	S.G. STREDNAK	DATE :	02/2019
CHECKED BY :	J.C. MORRISON	DATE :	02/2019
DESIGNED BY :	T.B. STUMP	DATE :	02/2019
DESIGN CHECKED BY :	J.C. MORRISON	DATE :	02/2019

DATE: 6/20/2019
TIME: 6:02:49 PM
USER: stump
DGN: \\saral3fp01\Data\Projects\6055776 - B-5980\900_CAD_GS\910_CAD\TO_NCDOT_TIP\Structures\04 Drawings\400_4L_S21_B5980_SMU_BOM.dgn