DocuSign Envelope ID: 35AFE635-EC6F-43C8-9DE7-CBABA789D735

2/20/2020 2:19:47 PM G:\Projects\2018\Division 3 (SEA)\B-5626 (Onslow 31 NC50 over Sandy Run Swamp)\Structures\Drawings\Final\401_B5626_SMU_SUPER_660031.dgn

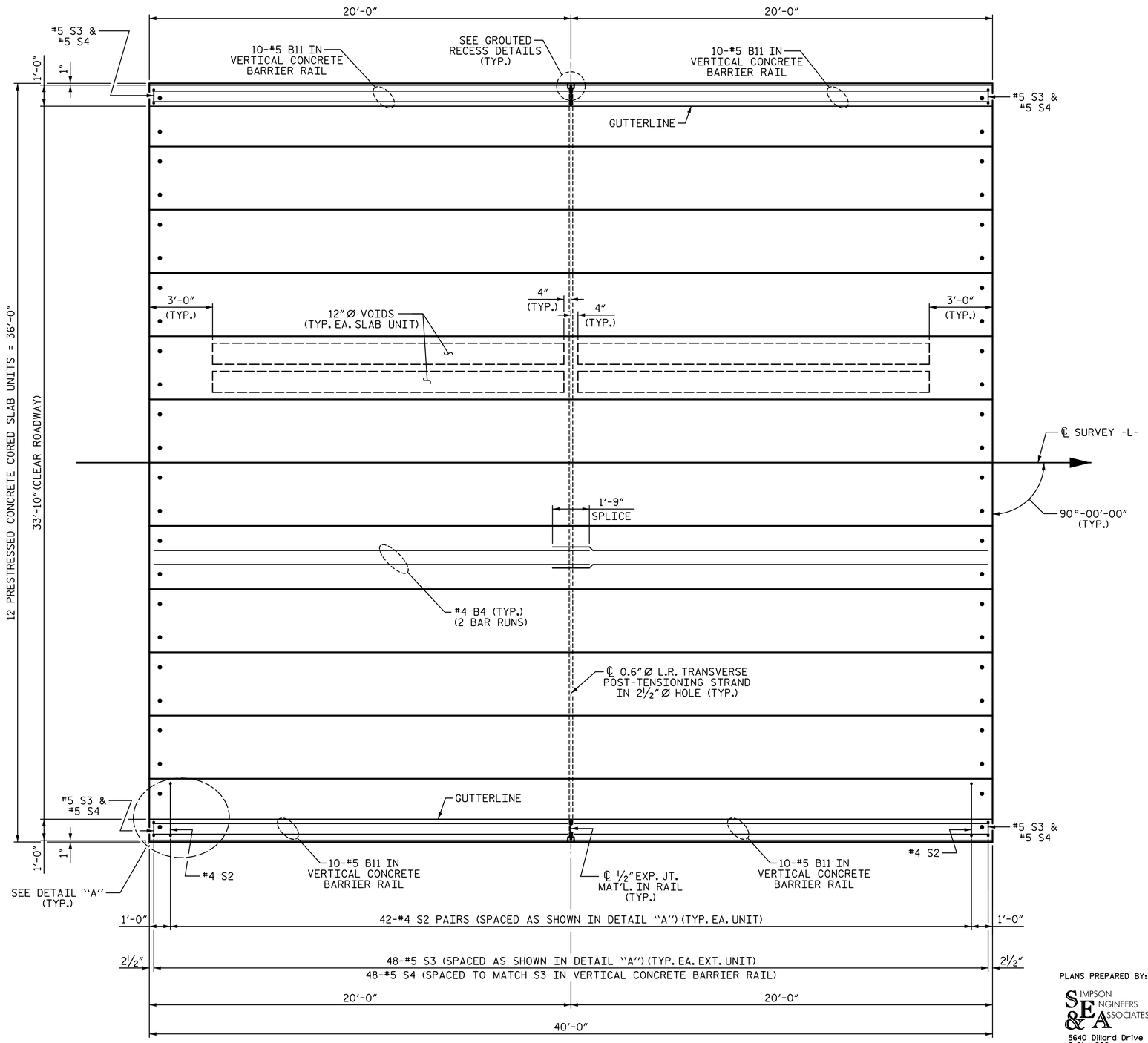

PLAN OF SPAN B

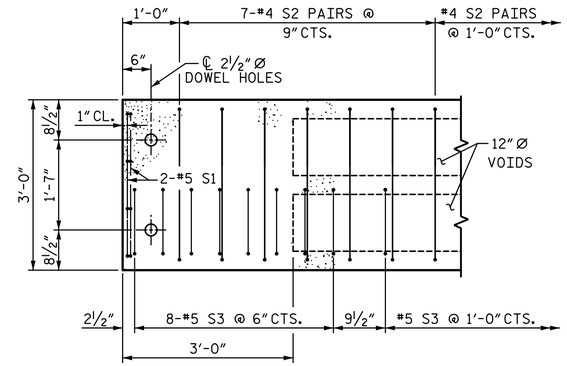

DETAIL "A"

(TYPICAL EACH END OF UNIT)
NOTE: EXTERIOR UNIT SHOWN - INTERIOR UNIT SIMILAR EXCEPT OMIT #5 S3 BARS.

PROJECT NO. B-5626
ONSLOW COUNTY
STATION: 23+71.50 -L-

SHEET 3 OF 6

STATE OF NORTH CAROLINA
DEPARTMENT OF TRANSPORTATION
RALEIGH

SUPERSTRUCTURE

PLAN OF SPAN B (40'-0" UNIT) 33'-10" CLEAR ROADWAY

90° SKEW

DRAWN BY: S.D. COOPER	DATE: 2-20	
CHECKED BY: J.A. BATTS	DATE: 2-20	
DESIGN ENGINEER OF RECORD: J.A. BATTS	DATE: 2-20	

PLANS PREPARED BY:

SIMPSON ENGINEERS & ASSOCIATES
5640 Dillard Drive
Suite 200
Cary, NC 27518
(919) 852-0468
(919) 852-0598 (Fax)
www.simpsonengr.com
LICENSURE NO. C-2521

NORTH CAROLINA PROFESSIONAL SEAL 18056 ENGINEER JOHN A. BATTS
2/20/2020

DOCUMENT NOT CONSIDERED FINAL UNLESS ALL SIGNATURES COMPLETED

REVISIONS							
NO.	BY:	DATE:	NO.	BY:	DATE:	SHEET NO.	S-10
1			3			TOTAL SHEETS	26
2			4				