DocuSign Envelope ID: FFB86FF5-384D-4BA8-B6ED-1862B2AED442

5/14/99

PROJECT WATER DETAILS

SOIL BEARING PRESSURE FOR ALL THRUST BLOCKING DETAILS THIS SHEET IS SHOWN AS NOTE 2.B ON DETAIL #WS_TB2

PREPARED IN THE OFFICE OF:
THE WOOTEN COMPANY
120 North Boylan Avenue Raleigh NC 27603-1423
919.828.0531 fax 919.834.3589
License Number: F-0115

VERTICAL SCALE 5' 0 5' 10'
HORIZONTAL SCALE 25' 0 25' 50'

WATER LINE CONSTRUCTION SHOWN ON THIS SHEET

PROJECT REFERENCE NO. B-5626
SHEET NO. UC-3B
DESIGNED BY: DGM
DRAWN BY: TK
CHECKED BY: CMG
APPROVED BY: DGM
REVISED:

NORTH CAROLINA DEPARTMENT OF TRANSPORTATION
UTILITIES ENGINEERING SEC.
PHONE: (919) 707-6690
FAX: (919) 250-4151

NORTH CAROLINA PROFESSIONAL ENGINEER SEAL 029997 DAVID G. MALINAUSKAS
DocuSigned by: David G. Malinauskas C461B23FCA544C5...
4/1/2021
Document Not Considered Final Unless All Signatures Completed
UTILITY CONSTRUCTION PLANS ONLY

UTILITY CONSTRUCTION

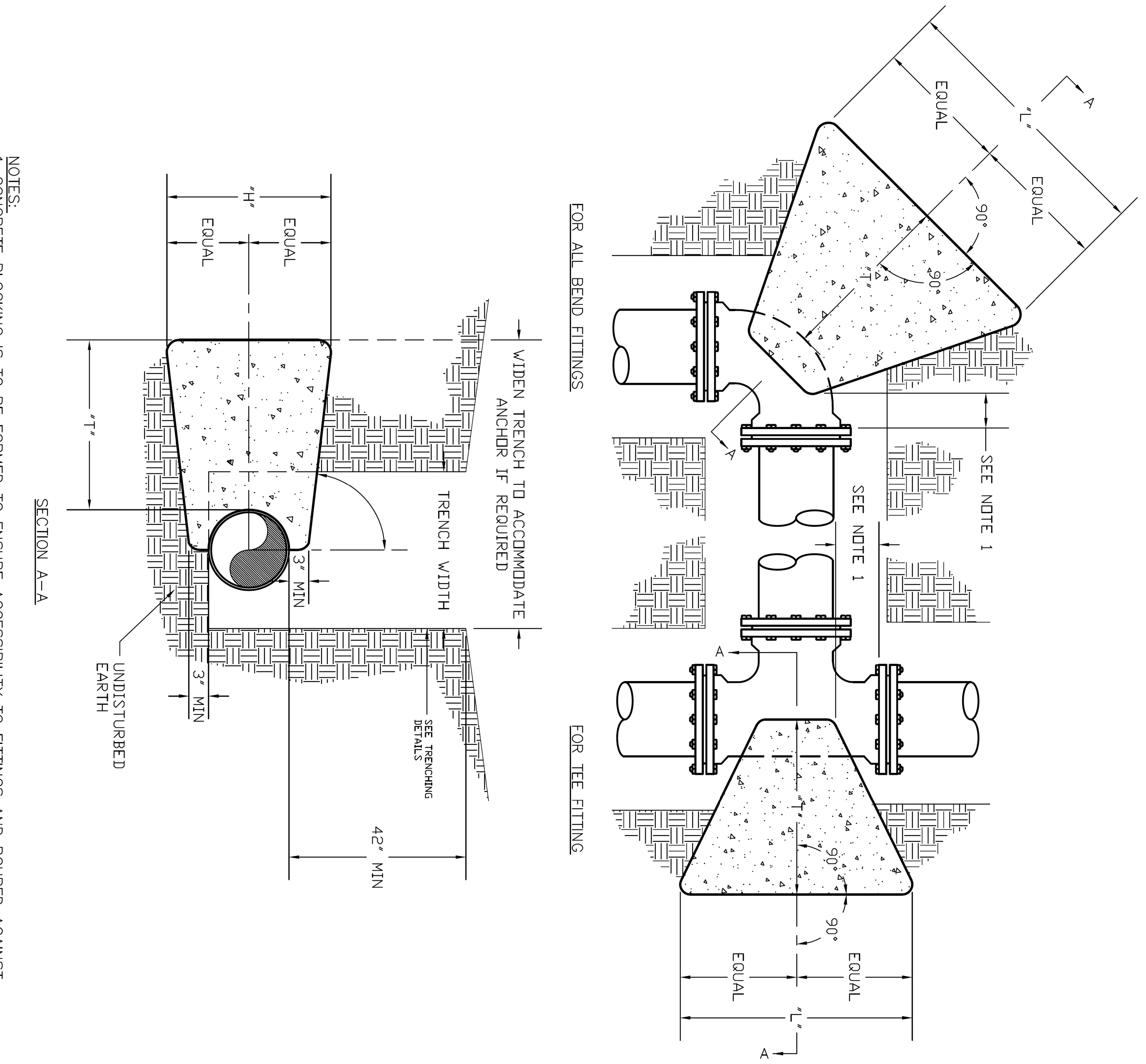

NOTES:
1. CONCRETE BLOCKING IS TO BE FORMED TO ENSURE ACCESSIBILITY TO FITTINGS AND POURED AGAINST UNDISTURBED EARTH.
2. ALL FITTINGS SHALL BE WRAPPED IN POLYETHYLENE TO PREVENT CONCRETE FROM CONTACTING FITTINGS, BOLTS, OR ENDS OF MECHANICAL JOINT BENDS.
3. CONCRETE TO BE MINIMUM 3,000 PSI @ 28 DAYS.
4. WHEN SACKRETE IS TO BE USED, IT SHALL BE PROPERLY MIXED PER MANUFACTURER SPECIFICATIONS.
5. FOR REQUIRED DIMENSIONS, SEE WS_TB2

ONWASA ONSLOW WATER AND SEWER AUTHORITY
Onslow Water & Sewer Authority
USE WITH "ONWASA MANUAL OF SPECIFICATIONS, STANDARDS and DETAILS, latest revision"
THRUST BLOCKING
SCALE: Not To Scale | DETAIL # WS_TB1
REVISION DATE: May, 2016 | SHEET #: 1 of 4

NOTE:
SEE THRUST COLLAR DETAIL, WS_TB4, SHEET 4 OF 4, THIS SHEET BELOW

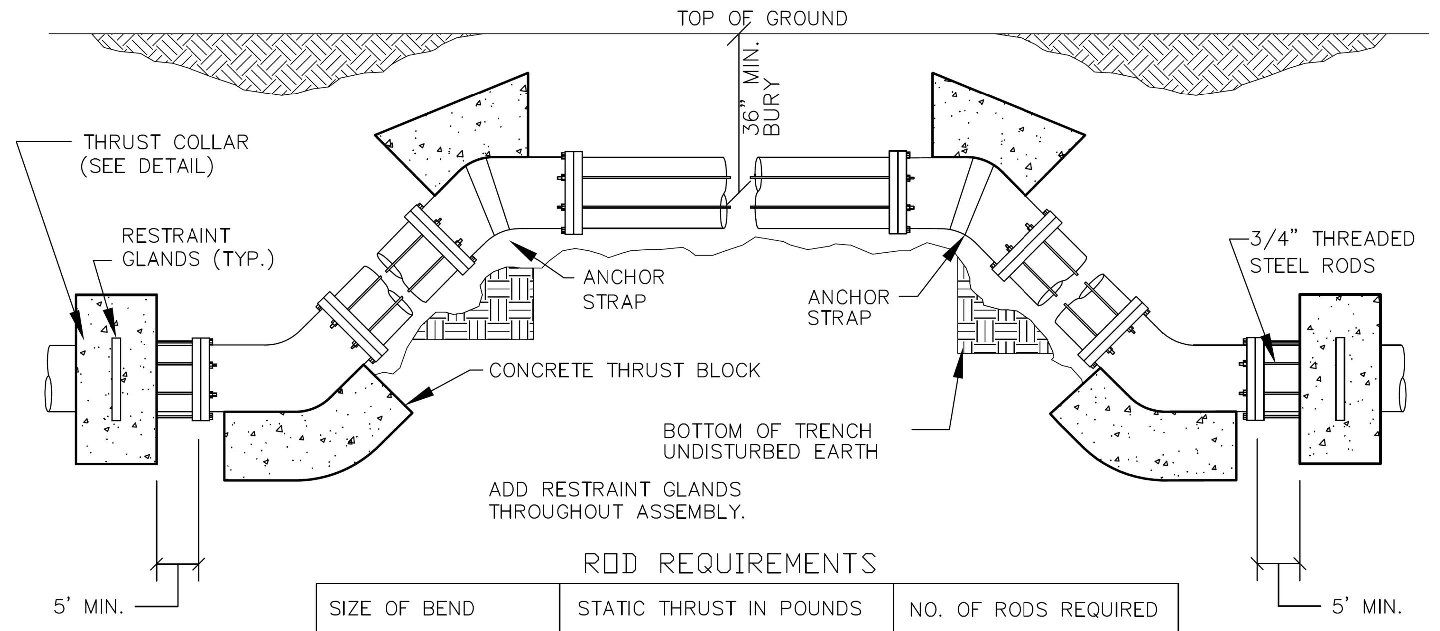

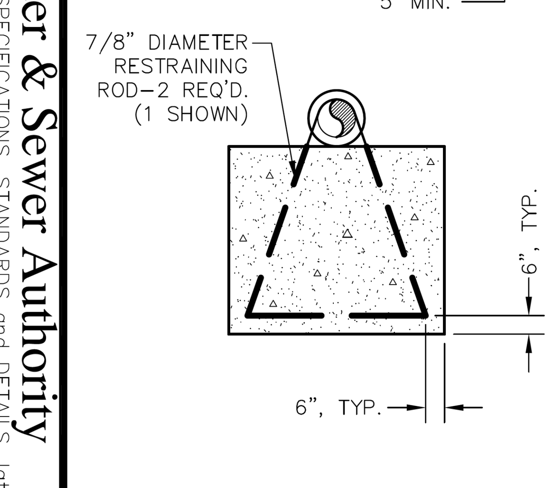

BLOCKING CROSS SECTION
NO SCALE

ROD REQUIREMENTS

SIZE OF BEND	STATIC THRUST IN POUNDS	NO. OF RODS REQUIRED
6"	4,328	4
8"	7,694	4
12"	17,312	4
16"	30,779	8
24"	69,252	8

GENERAL NOTES:

1. ALL FITTINGS SHALL BE WRAPPED IN POLYETHYLENE TO PREVENT CONCRETE FROM CONTACTING FITTINGS, BOLTS, OR ENDS OF MECHANICAL JOINT BENDS.
2. EACH FITTING SHALL BE SECURED BY TWO FORMS OF RESTRAINT. RESTRAINING GLANDS AND CONCRETE THRUST BLOCKING ARE PREFERRED. WEDGE-ACTION RESTRAINT GLANDS (I.E. MEGALUGS) ARE APPROVED ONLY FOR USE ON DUCTILE IRON PIPE. FULL-CIRCUMFERENTIAL PIPE RESTRAINT GLANDS (I.E. GRIP RINGS) MAY BE USED ON PVC OR DUCTILE IRON PIPE. ALL RESTRAINT GLANDS SHALL BE SPECIFICALLY DESIGNED FOR USE ON THE TYPE OF PIPE FOR WHICH THEY ARE BEING INSTALLED. OTHER FORMS OF RESTRAINT SUCH AS THREADED ROD, BELL RESTRAINT HARNESSES, ETC. MAY BE APPROVED BY ONWASA ON A CASE-BY-CASE BASIS.
3. IF APPROVED FOR USE BY ONWASA, STEEL RODS AND BOLTS SHALL BE 3/4" HOT DIPPED GALVANIZED.
4. MUST USE DUCTILE IRON EYE BOLTS WHERE NECESSARY.

ONWASA ONSLOW WATER AND SEWER AUTHORITY
Onslow Water & Sewer Authority
USE WITH "ONWASA MANUAL OF SPECIFICATIONS, STANDARDS and DETAILS, latest revision"
THRUST BLOCKING
SCALE: Not To Scale | DETAIL # WS_TB3
REVISION DATE: May, 2016 | SHEET #: 3 of 4

TEST PRESSURE = 150 PSI

PIPE SIZE	TYPE FITTING	DIMENSIONS (FT) "L"	"H"	"T"	VOLUME CONCRETE CU. YD.
<4 INCHES	11 1/4°	----	----	----	----
	22 1/2°	1.00	1.00	1.50	0.06
	45°	1.00	1.00	1.50	0.06
	90°	1.00	1.00	2.50	0.09
	TEE	1.00	1.00	2.00	0.07
4 INCHES	11 1/4°	1.00	1.00	2.50	0.09
	22 1/2°	1.00	1.00	2.50	0.09
	45°	1.00	1.00	2.50	0.09
	90°	1.50	1.50	2.50	0.15
	TEE	1.50	1.50	2.00	0.12
6 INCHES	11 1/4°	1.50	1.50	2.50	0.15
	22 1/2°	1.50	1.50	2.50	0.15
	45°	1.50	1.50	2.50	0.15
	90°	2.00	2.00	3.00	0.28
	TEE	2.00	2.00	2.50	0.23
8 INCHES	11 1/4°	2.00	2.00	2.50	0.23
	22 1/2°	2.00	2.00	2.50	0.23
	45°	2.00	2.00	2.75	0.25
	90°	3.00	2.00	3.00	0.39
	TEE	3.00	2.00	2.50	0.32
12 INCHES	11 1/4°	2.00	2.00	3.00	0.28
	22 1/2°	2.00	2.00	3.00	0.28
	45°	3.00	2.50	3.00	0.47
	90°	4.50	3.00	3.50	0.94
	TEE	4.50	3.00	3.00	0.81
16 INCHES	11 1/4°	2.00	2.00	3.00	0.28
	22 1/2°	3.00	2.00	3.00	0.39
	45°	4.00	3.00	3.50	0.84
	90°	6.50	3.50	3.50	1.54
	TEE	6.50	3.50	3.00	1.32

TEST PRESSURE = 200 PSI

PIPE SIZE	TYPE FITTING	DIMENSIONS (FT) "L"	"H"	"T"	VOLUME CONCRETE CU. YD.
<4 INCHES	11 1/4°	1.00	1.00	1.00	0.04
	22 1/2°	1.00	1.00	1.50	0.06
	45°	1.00	1.00	1.50	0.06
	90°	1.50	1.50	2.50	0.15
	TEE	1.50	1.50	2.00	0.12
4 INCHES	11 1/4°	1.00	1.00	2.50	0.09
	22 1/2°	1.00	1.00	2.50	0.09
	45°	1.50	1.50	2.50	0.15
	90°	1.50	1.50	2.50	0.15
	TEE	1.50	1.50	2.00	0.12
6 INCHES	11 1/4°	1.50	1.50	2.50	0.15
	22 1/2°	1.50	1.50	2.50	0.15
	45°	1.50	1.50	2.50	0.15
	90°	2.50	2.00	3.00	0.33
	TEE	2.50	2.00	2.50	0.28
8 INCHES	11 1/4°	2.00	2.00	2.50	0.23
	22 1/2°	2.00	2.00	2.50	0.23
	45°	2.00	2.00	2.75	0.23
	90°	4.00	2.00	3.00	0.50
	TEE	4.00	2.00	2.50	0.42
12 INCHES	11 1/4°	2.00	2.00	3.00	0.28
	22 1/2°	3.00	2.00	3.00	0.39
	45°	4.00	2.50	3.00	0.61
	90°	5.50	3.00	3.50	1.13
	TEE	5.50	3.00	3.00	0.97
16 INCHES	11 1/4°	2.00	2.00	3.00	0.28
	22 1/2°	4.00	2.00	3.00	0.50
	45°	5.50	3.00	3.50	1.13
	90°	7.50	4.00	3.50	2.01
	TEE	7.50	4.00	3.00	1.72

CHART NOTES:
1. IF BLOCKING EXCAVATION IS IN LIGHTLY COMPACTED FILL AREAS, OR IN AREAS WHERE BOULDERS OR STUMPS HAVE BEEN REMOVED, BLOCKING SIZE MUST BE RE-SIZED FOR THE SPECIFIC LOCATION/CIRCUMSTANCE BY A NC LICENSED PROFESSIONAL ENGINEER.
2. BLOCKING SIZES SHOWN IN THESE TABLES ASSUME THE FOLLOWING:
   a. BLOCKING IS CONSTRUCTED IN RESIDUAL SOILS AS SHOWN IN DETAIL
   b. SOIL BEARING PRESSURE = 2000 PSF
   c. VELOCITY OF FLOW = 15 FPS
3. THIS DETAIL NOT APPLICABLE TO REDUCING BENDS.
4. NEITHER THE WEIGHT OF THE CONCRETE BLOCKING NOR FRICTION BETWEEN CONCRETE BLOCKING AND SOIL WAS ADDED INTO BLOCKING SIZES COMPUTATION. THEREFORE, BLOCKING SIZE IS CONSERVATIVE.

NOTE:
150 PSI TEST PRESSURE NOT ALLOWED IN CONTRACT

ONWASA ONSLOW WATER AND SEWER AUTHORITY
Onslow Water & Sewer Authority
USE WITH "ONWASA MANUAL OF SPECIFICATIONS, STANDARDS and DETAILS, latest revision"
THRUST BLOCKING
SCALE: Not To Scale | DETAIL # WS_TB2
REVISION DATE: May, 2016 | SHEET #: 2 of 4

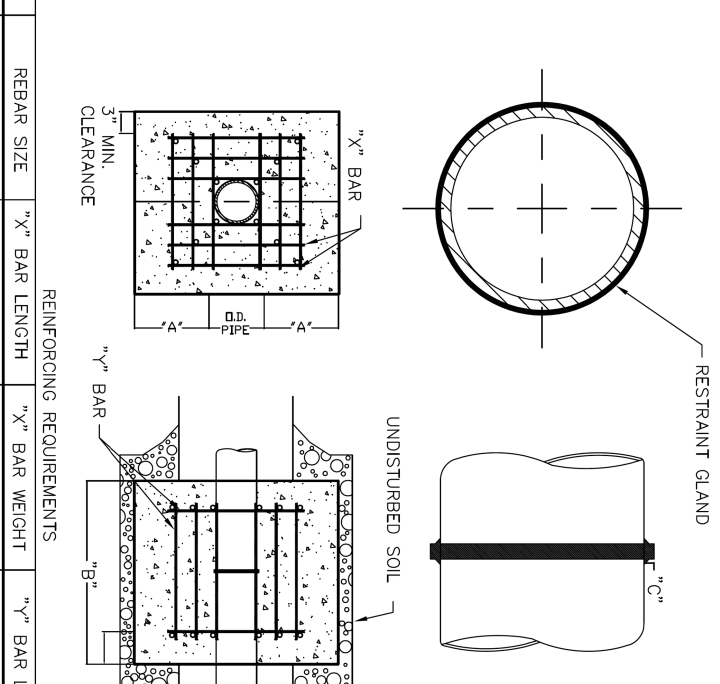

REINFORCING REQUIREMENTS

I.D. PIPE	REBAR SIZE	"X" BAR LENGTH	"X" BAR WEIGHT	"Y" BAR LENGTH	"Y" BAR WEIGHT	NO. REQUIRED
6" – 36"	#5	2'-2"+ O.D. PIPE	1.043 LBS/FT	1'-1"	1.1 LBS. EACH	X-24, Y-12
48" & greater	#6	3'-0"+ O.D. PIPE	1.502 LBS/FT	1'-3"	1.9 LBS. EACH	X-24, Y-12

THRUST COLLAR, AND THRUST SCHEDULE

I.D. PIPE	"A"	"B"	"C-6"-16", 20"-24", 30"-36", 48"
6" – 36"	1'-4"	1'-7"	2" 3" 4"
48" & greater	1'-8"	1'-9"	6"

NOTES:
1. CONCRETE SHALL BE 3000 PSI AND TRANSIT MIXED.
2. REINFORCING BARS SHALL BE DEFORMED AND TIED TOGETHER.
3. TRENCH BOTTOM WIDTH IN VICINITY OF THRUST BLOCK INSTALLATION SHALL BE THE MINIMUM WIDTH AS SHOWN ON STANDARD EMBEDMENT DETAIL.
4. BACKFILL TAMPED IN 6" LIFTS PER STANDARD EMBEDMENT DETAIL.

ONWASA ONSLOW WATER AND SEWER AUTHORITY
Onslow Water & Sewer Authority
USE WITH "ONWASA MANUAL OF SPECIFICATIONS, STANDARDS and DETAILS, latest revision"
THRUST BLOCKING
SCALE: Not To Scale | DETAIL # WS_TB4
REVISION DATE: May, 2016 | SHEET #: 4 of 4

$$$$$$SYSTIME$$$$$
$$$$$$$$$$$$$$$$$$DGN$$$$$$$$$$$$$$$$
$$$$USERNAME$$$$