DocuSign Envelope ID: D7220FDA-0D3C-481F-B292-DB93B91785B8

NOTES

STIRRUPS IN CAP MAY BE SHIFTED AS NECESSARY TO CLEAR DOWELS.

★ INVERT ALTERNATE STIRRUPS.

FOR ADDITIONAL REINFORCING STEEL IN PP 18 × 0.50 GALVANIZED STEEL PILES, SEE "18" STEEL PIPE PILE" SHEET.

GALVANIZE THE TOP OF EACH INTERIOR BENT PILE A MINIMUM OF 33 FEET. GALVANIZE IN ACCORDANCE WITH SECTION 1076 OF THE STANDARD SPECIFICATIONS.

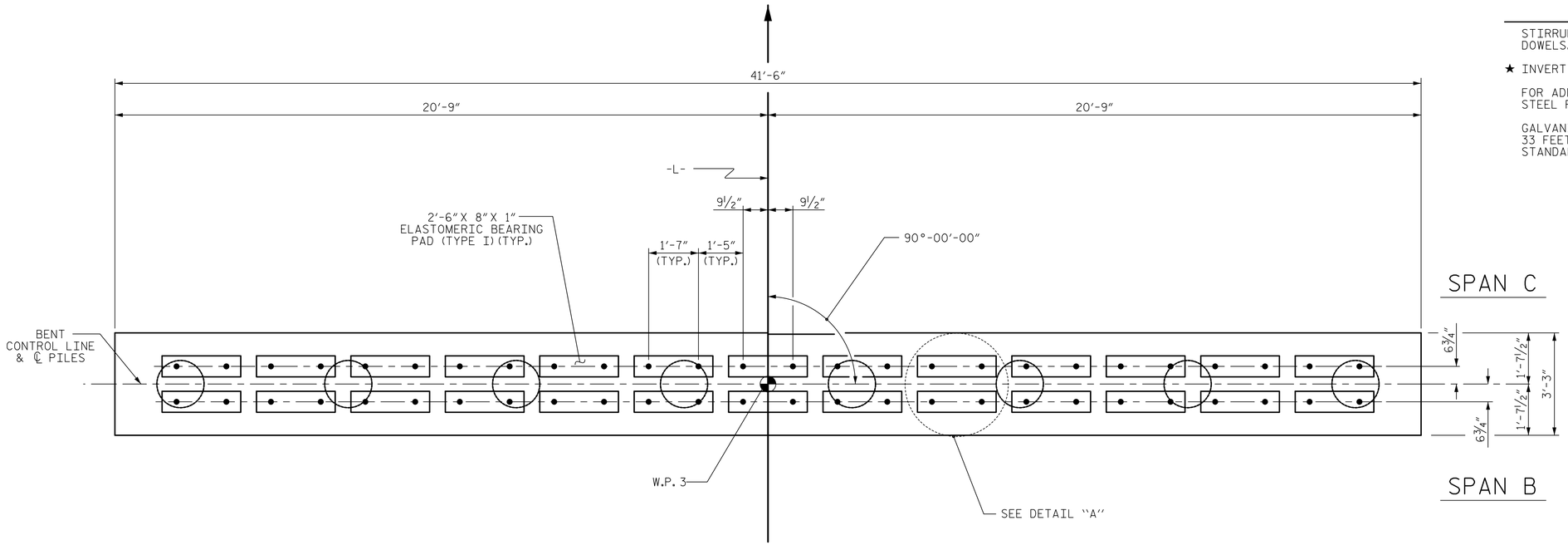

PLAN

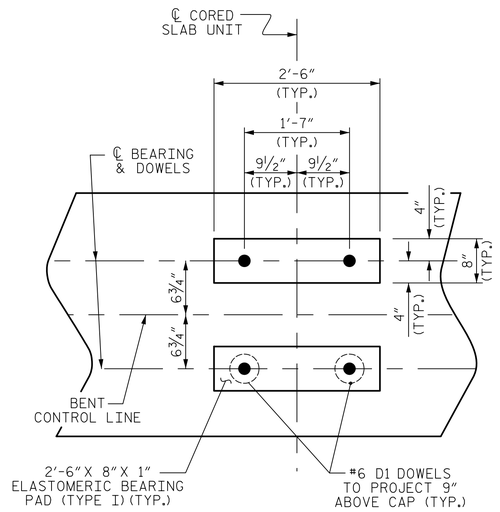

DETAIL "A"

(DIMENSIONS ARE TYPICAL EACH BEARING)

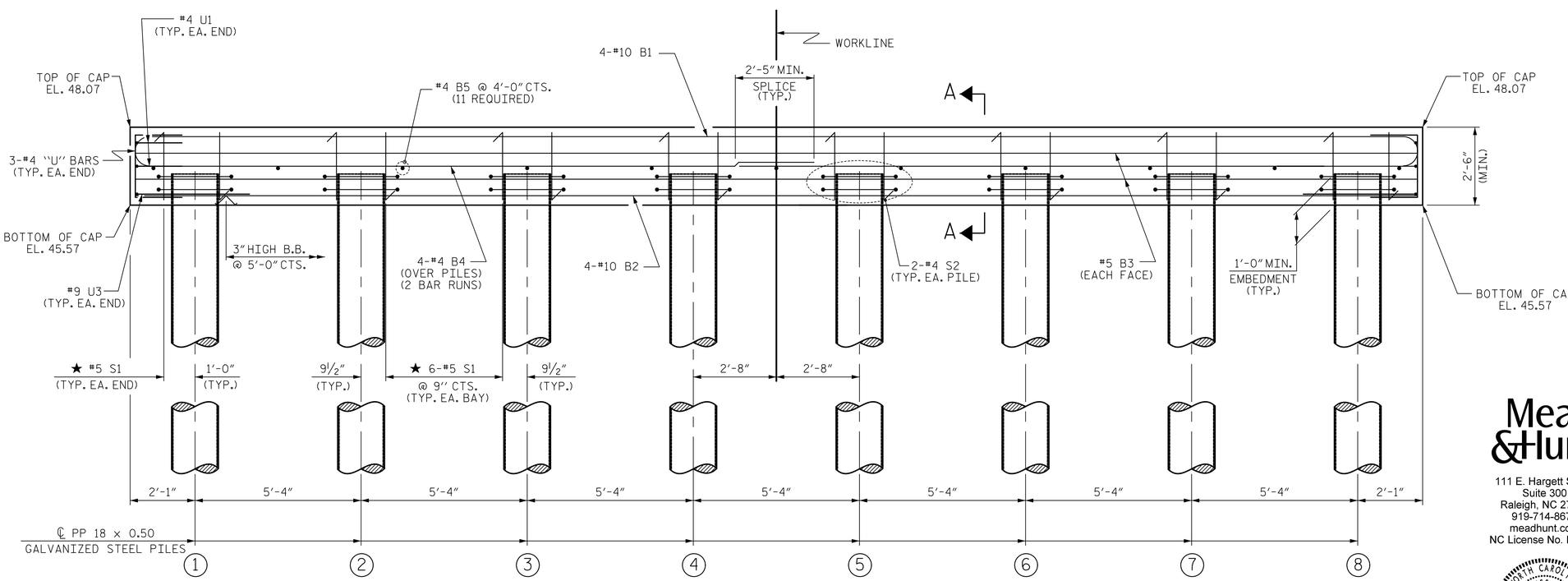

ELEVATION

FOR SECTION A-A, SEE SHEET 2 OF 2

Mead & Hunt
111 E. Hargett Street
Suite 300
Raleigh, NC 27601
919-714-8670
meadhunt.com
NC License No. F-1235

NORTH CAROLINA PROFESSIONAL ENGINEER SEAL 043177 JOHN S. HOBSON

DocuSigned by: Jack Hobson 02/10/2021
5B6E7C29870044B...

DOCUMENT NOT CONSIDERED FINAL UNLESS ALL SIGNATURES COMPLETED

PROJECT NO. B-5619

LENOIR COUNTY

STATION: 23+06.50 -L-

SHEET 1 OF 2

STATE OF NORTH CAROLINA
DEPARTMENT OF TRANSPORTATION
RALEIGH

STANDARD

BENT No. 2

REVISIONS						SHEET NO.
NO.	BY:	DATE:	NO.	BY:	DATE:	S2-17
1			3			TOTAL SHEETS
2			4			23

ASSEMBLED BY : D.J. CARTE	DATE : 12/09/20	
CHECKED BY : J.S. HOBSON	DATE : 12/28/20	
DRAWN BY : DGE 06/10	REV. 6/17	MAA/THC
CHECKED BY : MKT 06/10		

STD.NO. 18" PP_BT_39_90S_<60'