DocuSign Envelope ID: D7220FDA-0D3C-481F-B292-DB93B91785B8

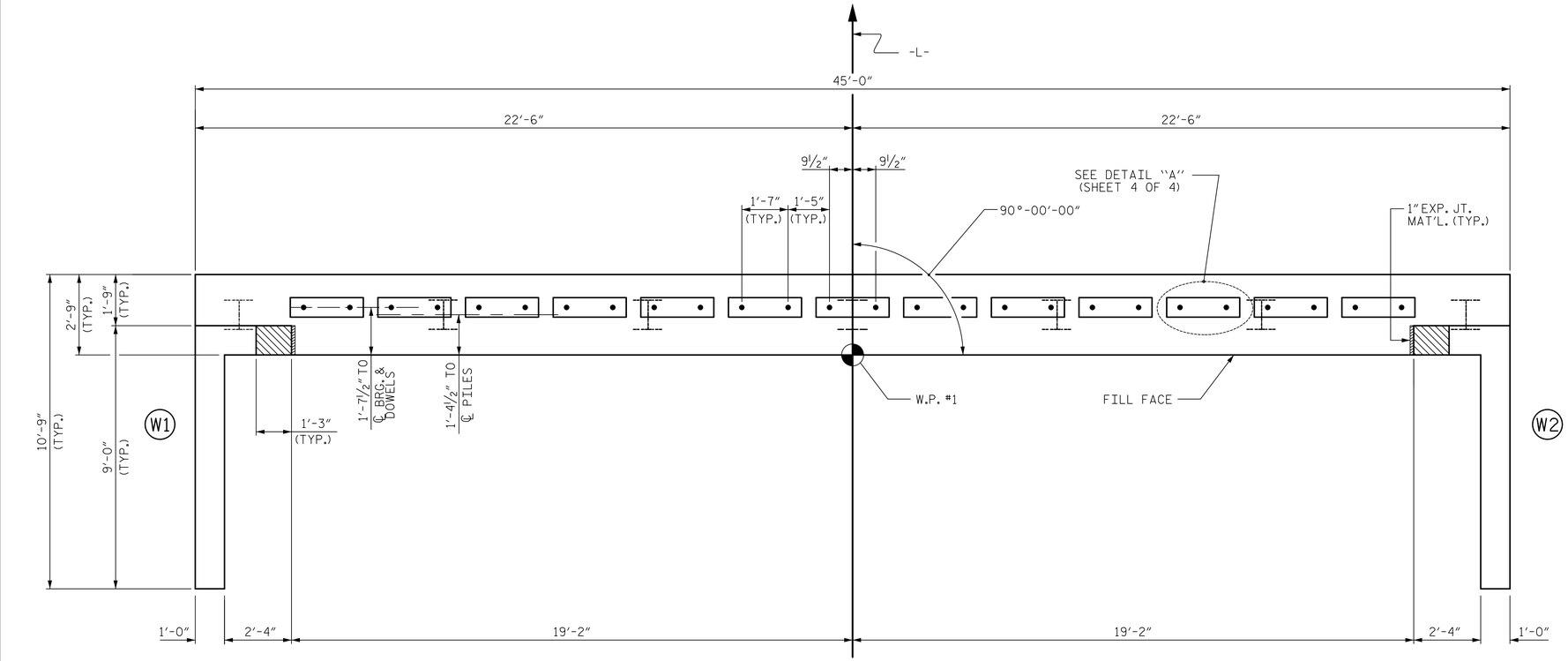

PLAN

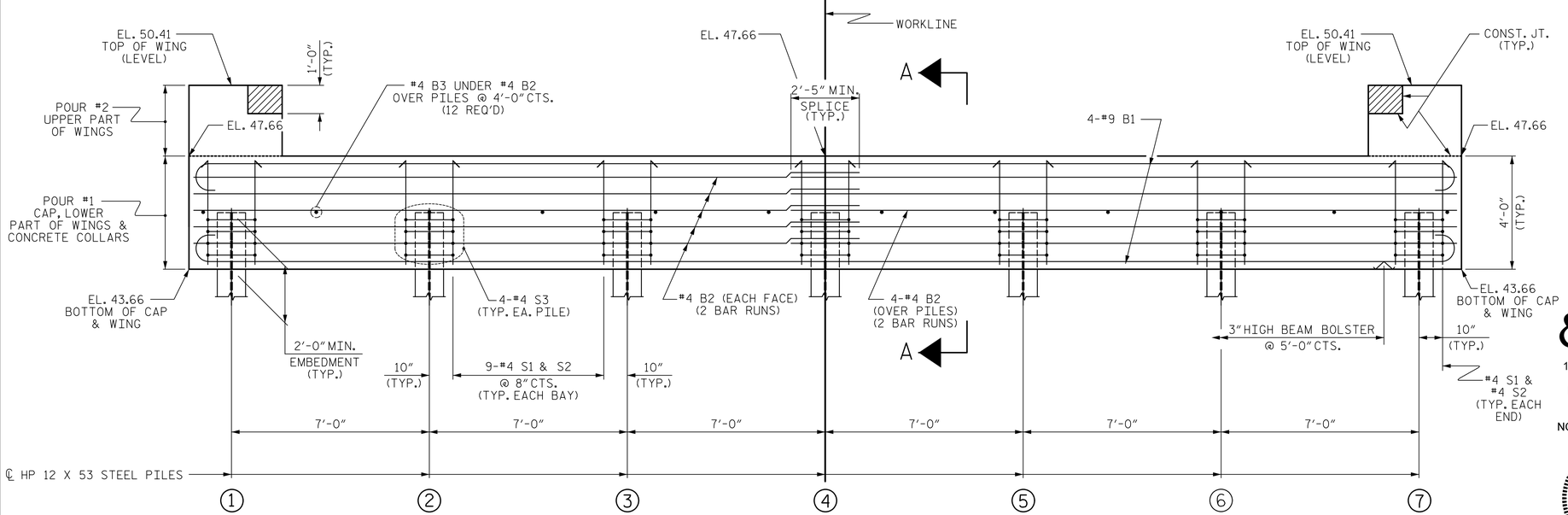

ELEVATION

WINGS NOT SHOWN FOR CLARITY.
FOR SECTION A-A, SEE SHEET 4 OF 4.
CONCRETE COLLARS FOR STEEL PILES NOT SHOWN IN PLAN AND ELEVATION VIEWS FOR CLARITY.
SEE "CORROSION PROTECTION FOR STEEL PILES DETAIL", SHEET 4 OF 4.

NOTES

STIRRUPS IN CAP MAY BE SHIFTED AS NECESSARY TO CLEAR DOWELS.

THE CONCRETE IN THE SHADED AREA OF THE WING SHALL BE POURED AFTER THE VERTICAL CONCRETE BARRIER RAIL IS CAST IF SLIP FORMING IS USED.

FOR PILE SPLICE DETAILS, SEE SHEET 4 OF 4.

FOR WING DETAILS, SEE SHEET 3 OF 4.

PROJECT NO. B-5619
LENOIR COUNTY
STATION: 23+06.50 -L-

SHEET 1 OF 4

STATE OF NORTH CAROLINA
DEPARTMENT OF TRANSPORTATION
RALEIGH
STANDARD
END BENT No. 1

REVISIONS						SHEET NO.
NO.	BY:	DATE:	NO.	BY:	DATE:	S2-11
1			3			TOTAL SHEETS
2			4			23

STD. NO. EB_39_90S4

Mead & Hunt
111 E. Hargett Street
Suite 300
Raleigh, NC 27601
919-714-8670
meadhunt.com
NC License No. F-1235

NORTH CAROLINA PROFESSIONAL SEAL 043177 ENGINEER JOHN S. HOBSON
DocuSigned by: Jack Hobson 5DEE7C29E7004AB 02/10/2021
DOCUMENT NOT CONSIDERED FINAL UNLESS ALL SIGNATURES COMPLETED

ASSEMBLED BY : D.J. CARTE	DATE : 12/09/20		
CHECKED BY : J.S. HOBSON	DATE : 12/28/20		
DRAWN BY : WJH 12/11	REV. 4/15	MAA/TMG	
CHECKED BY : AAC 12/11			