DocuSign Envelope ID: F561E63A-9EC0-4879-8D48-E495F1C32CED

## NOTES

STIRRUPS IN CAP MAY BE SHIFTED AS NECESSARY TO CLEAR #4V1 BARS.

THE TOP SURFACE OF THE END BENT CAP AND WINGS, EXCEPT THE BEARING AREA AND NON-INTEGRAL AREA AT THE ENDS OF CAP, SHALL BE RAKED TO A DEPTH OF 1/4".

THE UPPER PORTION OF THE INTEGRAL END BENT SHALL BE POURED WITH THE SUPERSTRUCTURE, SEE SUPERSTRUCTURE PLANS.

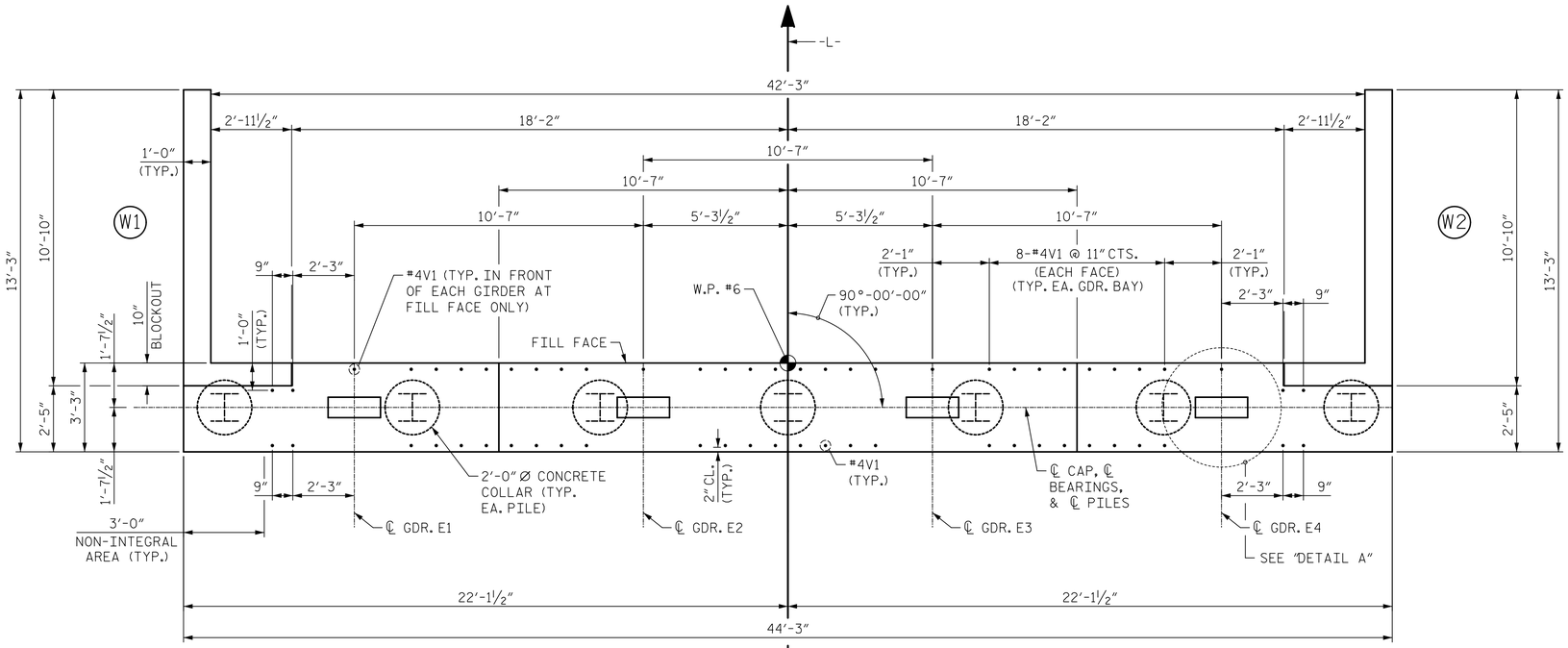


## PLAN

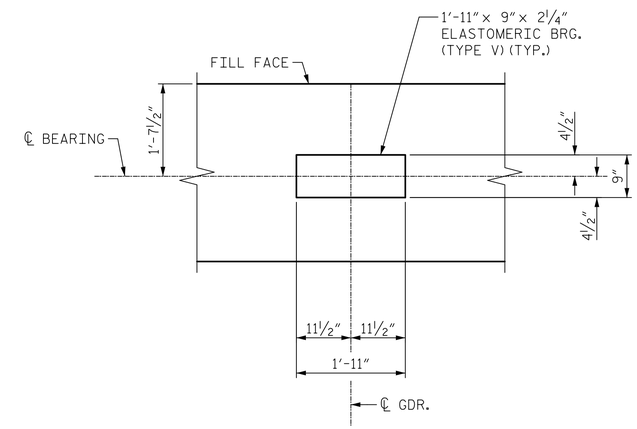


## DETAIL "A"

(TYPICAL AT EACH BEARING)

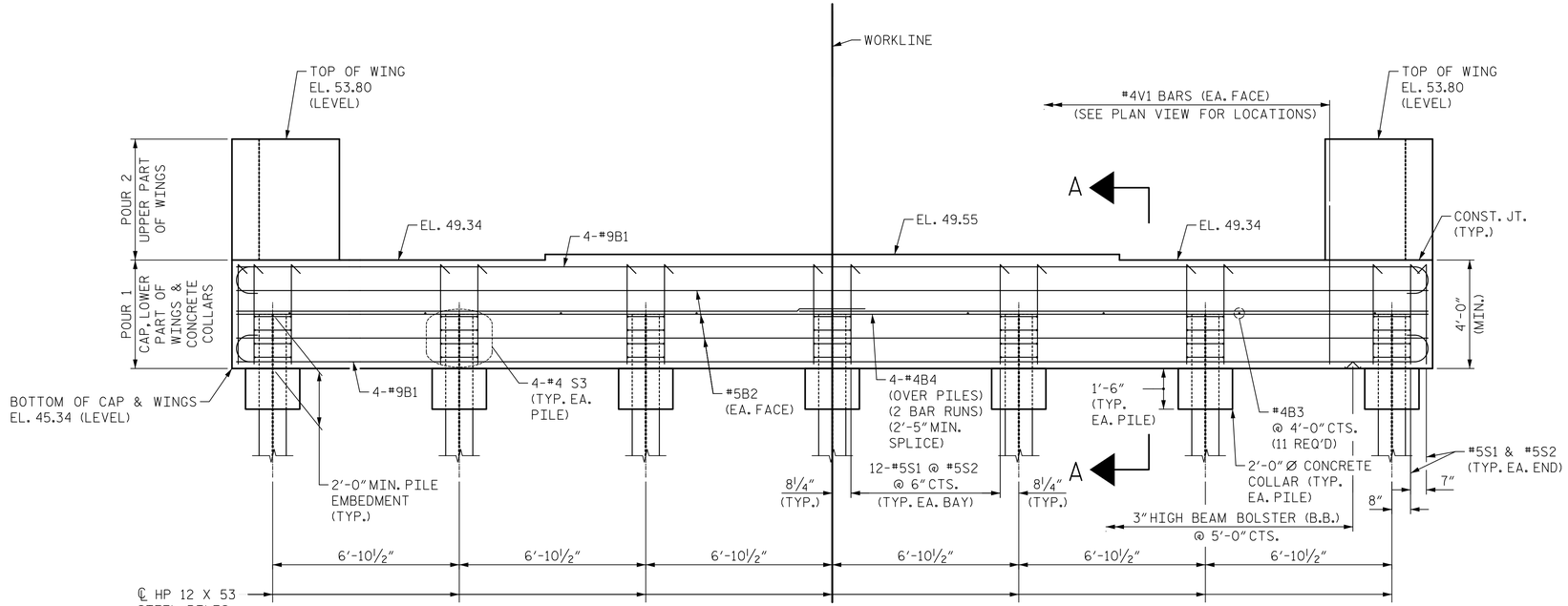


## ELEVATION

Mead & Hunt
111 E. Hargett Street
Suite 300
Raleigh, NC 27601
919-714-8670
meadhunt.com
NC License No. F-1235

NORTH CAROLINA PROFESSIONAL SEAL 043177 ENGINEER JOHN S. HOBSON

DocuSigned by: Jack Hobson 5B6E7C29B70044B... 02/10/2021

DOCUMENT NOT CONSIDERED FINAL UNLESS ALL SIGNATURES COMPLETED

PROJECT NO. B-5619
LENOIR COUNTY
STATION: 30+80.00 -L-

SHEET 1 OF 3

STATE OF NORTH CAROLINA
DEPARTMENT OF TRANSPORTATION
RALEIGH

SUBSTRUCTURE

END BENT 2

| REVISIONS | | | | | | | | SHEET NO. |
|---|---|---|---|---|---|---|---|---|
| NO. | BY: | DATE: | NO. | BY: | DATE: | | | S1-35 |
| 1 | | | 3 | | | | | TOTAL SHEETS |
| 2 | | | 4 | | | | | 40 |

| | | | |
|---|---|---|---|
| DRAWN BY : | D.J. CARTE | DATE : | 11/12/20 |
| CHECKED BY : | J.S. HOBSON | DATE : | 12/04/20 |
| DESIGN ENGINEER OF RECORD : | J.S. HOBSON | DATE : | 02/09/21 |