DocuSign Envelope ID: F561E63A-9EC0-4879-8D48-E495F1C32CED

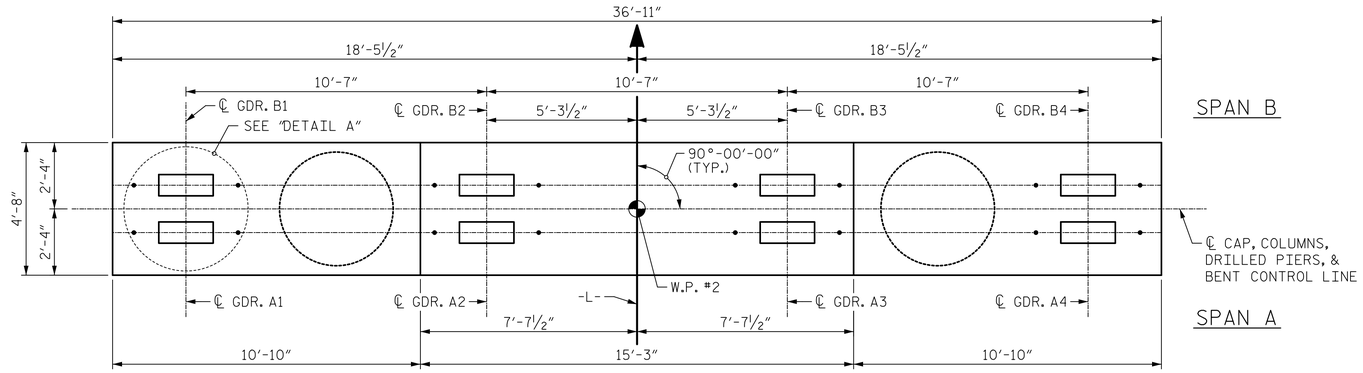

PLAN

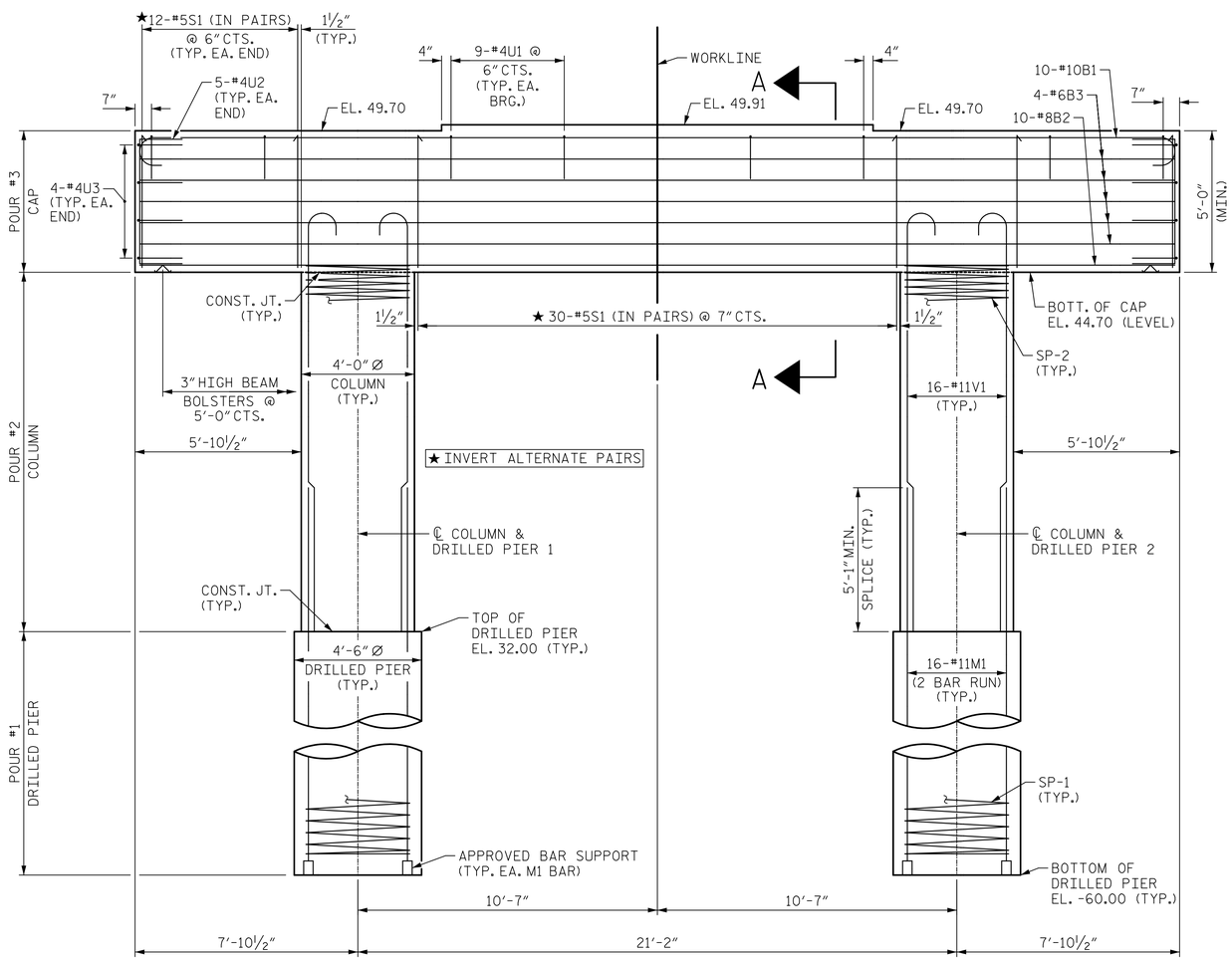

ELEVATION

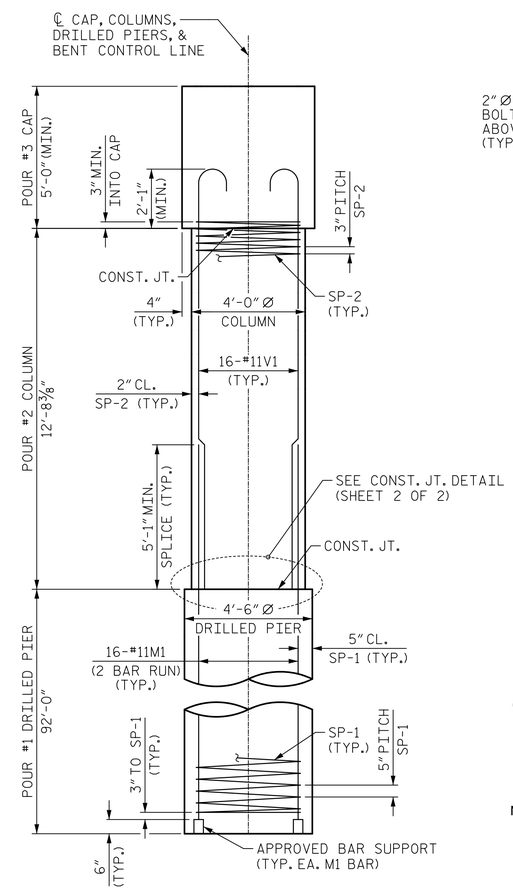

END ELEVATION

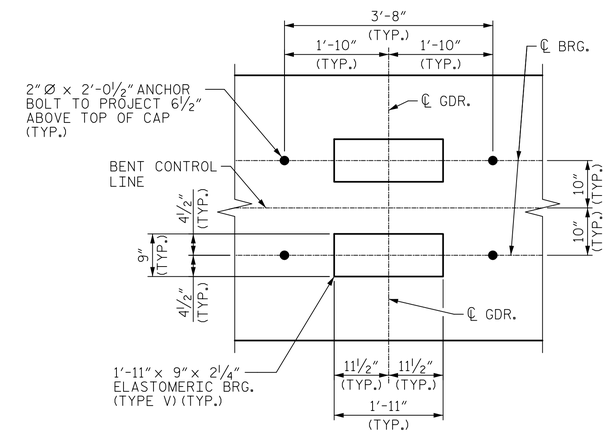

DETAIL "A"
(TYPICAL AT EACH BEARING)

NOTES

STIRRUPS AND #4U1 BARS IN CAP MAY BE SHIFTED AS NECESSARY TO CLEAR ANCHOR BOLTS.

HOOKS ON "V" BARS MAY BE TURNED AS NECESSARY FOR PLACING REINFORCING STEEL.

ALL STEEL IN THE DRILLED PIERS IS INCLUDED IN THE PAY ITEMS FOR "REINFORCING STEEL" AND "SPIRAL COLUMN REINFORCING STEEL."

THE CONTRACTOR'S ATTENTION IS CALLED TO THE FACT THAT THE LONGITUDINAL REINFORCEMENT FOR DRILLED PIERS IS DETAILED WITH 3 FEET OF EXTRA LENGTH.

Mead & Hunt
111 E. Hargett Street
Suite 300
Raleigh, NC 27601
919-714-8670
meadhunt.com
NC License No. F-1235

NORTH CAROLINA PROFESSIONAL SEAL 043177 ENGINEER JOHN S. HOBSON

DocuSigned by: Jack Hobson 5B6E7C2B670044B... 02/10/2021

DOCUMENT NOT CONSIDERED FINAL UNLESS ALL SIGNATURES COMPLETED

PROJECT NO. B-5619
LENOIR COUNTY
STATION: 30+80.00 -L-

SHEET 1 OF 2

STATE OF NORTH CAROLINA
DEPARTMENT OF TRANSPORTATION
RALEIGH

SUBSTRUCTURE

BENT 1

REVISIONS						SHEET NO.
NO.	BY:	DATE:	NO.	BY:	DATE:	S1-29
1			3			TOTAL SHEETS
2			4			40

DRAWN BY : J.S. HOBSON DATE : 10/22/20
CHECKED BY : J.A. BOYER DATE : 12/10/20
DESIGN ENGINEER OF RECORD : J.S. HOBSON DATE : 02/09/21