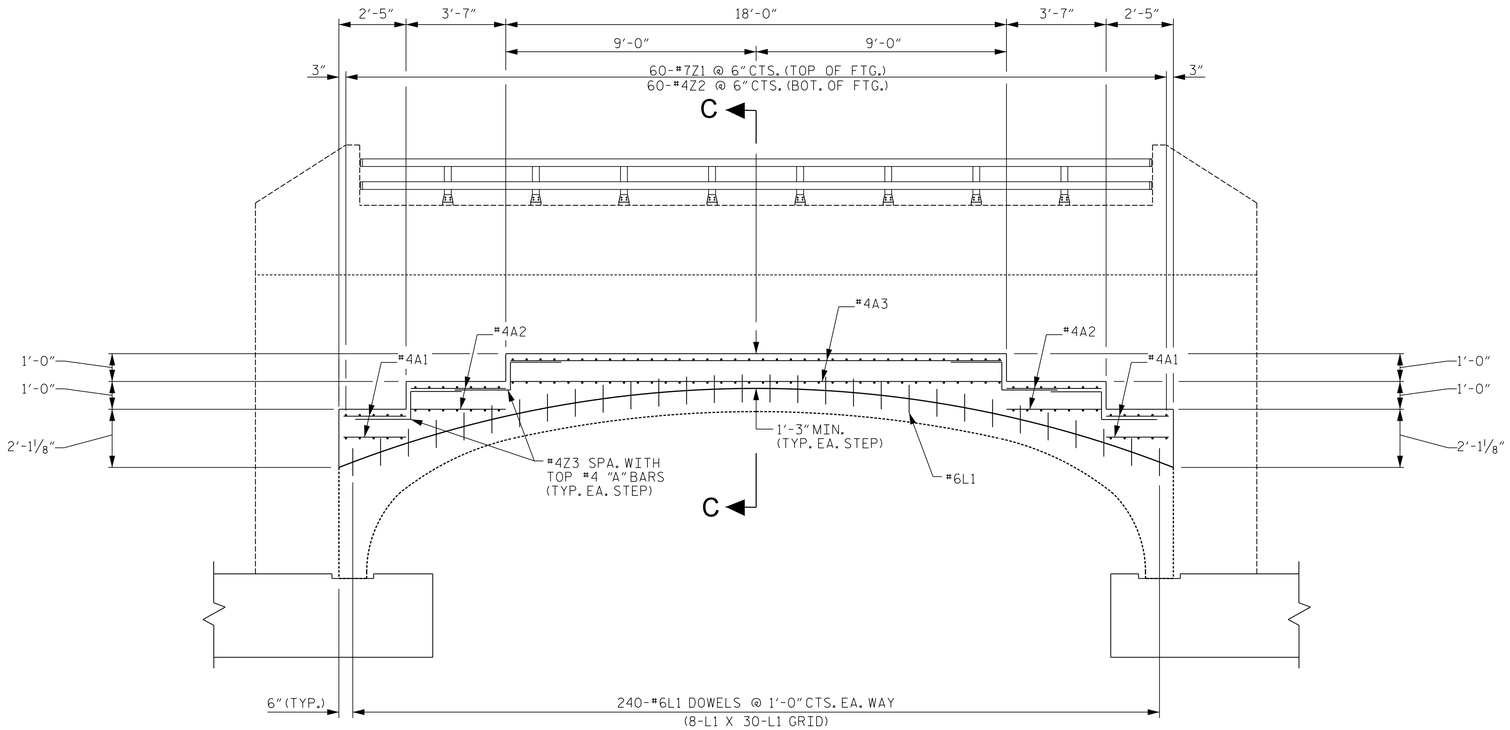

OUTLET HEADWALL ELEVATION

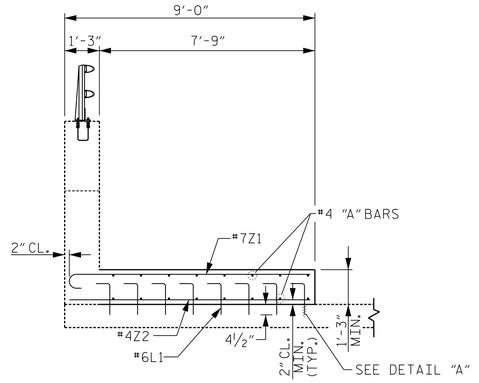

SECTION C-C

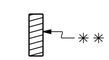

** STRUCTURAL CONNECTION INSERTS
2 STRUT OR EQUAL;
LENGTH = 4 1/2", INSERT WIDTH = 2",
DIA. = 3/4". 240 INSERTS REQ'D.

DETAIL A

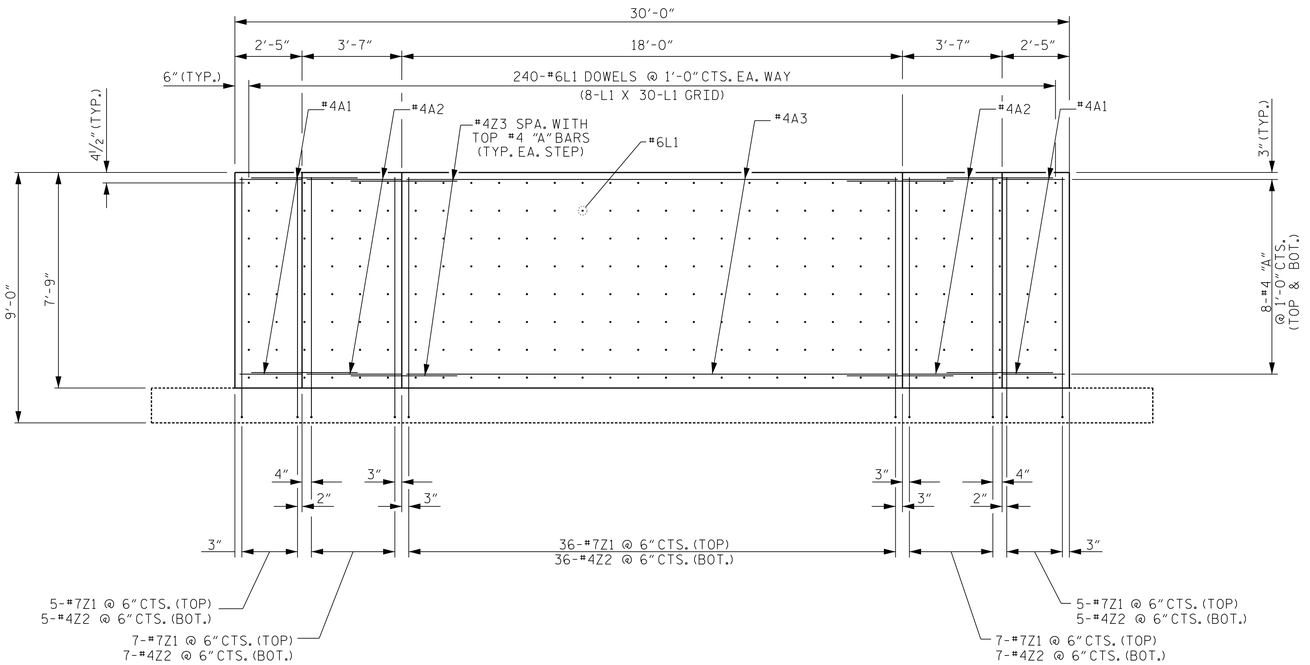

OUTLET HEADWALL FOOTING PLAN

NOTE: WINGS NOT SHOWN FOR CLARITY.

NORTH CAROLINA PROFESSIONAL SEAL 043143 ENGINEER CHRISTOPHER B. CORDELL
Document Signed By: Christopher B. Cordell
56BE3A2A...
8/19/2020

PROJECT NO. U-5887

HENDERSON COUNTY

STATION: 22+44.41 -L-

SHEET 16 OF 21

DOCUMENT NOT CONSIDERED FINAL UNLESS ALL SIGNATURES COMPLETED

STATE OF NORTH CAROLINA
DEPARTMENT OF TRANSPORTATION
RALEIGH

OUTLET HEADWALL FOOTING DETAILS

V&M Vaughn & Melton Consulting Engineers
Middlesboro, Kentucky 606-248-6600
Knoxville, Tennessee 865-546-5800
Asheville, North Carolina 828-253-2796
Copyright © 2006 Vaughn & Melton, Inc. All Rights Reserved

DRAWN BY: HL	DATE: 03/2020
CHECKED BY: CBC	DATE: 03/2020
ENG. OF RECORD: CBC	DATE: 03/2020

REVISIONS						SHEET NO.
NO.	BY:	DATE:	NO.	BY:	DATE:	C-16
1			3			TOTAL SHEETS
2			4			36