DocuSign Envelope ID: 512B491B-65D4-4F99-B90E-F18AE07EE550

| PROJECT REFERENCE NO. | SHEET NO. |
|---|---|
| U-5887 | Sig. 3.0 |

## PHASING DIAGRAM

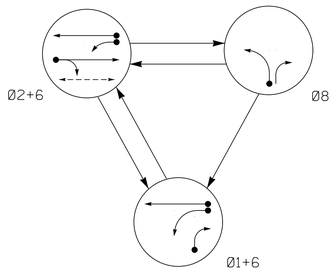


## TABLE OF OPERATION

| SIGNAL FACE | PHASE Ø1+6 | PHASE Ø2+6 | PHASE Ø8 | FLASH |
|---|---|---|---|---|
| 11 | ←- | F Y | ←R | ←Y |
| 21,22 | R | G | R | Y |
| 61,62 | G | G | R | Y |
| 81 | R | R | G | R |
| 82 | R/→ | R | G | R |
| P21,P22 | DW | W | DW | DRK |

## SIGNAL FACE I.D.

All Heads L.E.D.

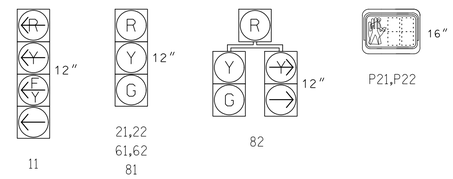


## OASIS 2070 LOOP & DETECTOR INSTALLATION CHART

| INDUCTIVE LOOPS | | | | | DETECTOR PROGRAMMING | | | | | | |
|---|---|---|---|---|---|---|---|---|---|---|---|
| LOOP | SIZE (FT) | DISTANCE FROM STOPBAR (FT) | TURNS | NEW LOOP | PHASE | CALLING | EXTENSION | FULL TIME DELAY | STRETCH TIME | DELAY TIME | SYSTEM LOOP | NEW CARD |
| 1A | 6X40 | 0 | 2-4-2 | Y | 1 | Y | Y | - | - | 15 | - | Y |
| | | | | | 6 | Y | Y | - | - | - | - | Y |
| 1B | 6X40 | 0 | 2-4-2 | Y | 1 | Y | Y | - | - | 15 | - | Y |
| 2A | 6X6 | 70 | 3 | Y | 2 | Y | Y | - | - | - | - | Y |
| 6A | 6X6 | 70 | 3 | Y | 6 | Y | Y | - | - | - | - | Y |
| 8A | 6X40 | 0 | 2-4-2 | Y | 8 | Y | Y | - | - | 3 | - | Y |

3 Phase
Fully Actuated
Isolated

## NOTES

1. Refer to "Roadway Standard Drawings NCDOT" dated January 2018 and "Standard Specifications for Roads and Structures" dated January 2018.
2. Do not program signal for late night flashing operation unless otherwise directed by the Engineer.
3. Phase 1 may be lagged.
4. Set all detector units to presence mode.
5. Omit "WALK" and flashing "DON'T WALK" with no pedestrian calls.
6. Program pedestrian heads to countdown the flashing "Don't Walk" time only.
7. Metal poles with mast arms and pedestrian pedestals shall be BROWN per special provisions.

PHASING DIAGRAM DETECTION LEGEND

- DETECTED MOVEMENT
- UNDETECTED MOVEMENT (OVERLAP)
- UNSIGNALIZED MOVEMENT
- PEDESTRIAN MOVEMENT

This plan supersedes the plan signed and sealed on 11/19/2019.

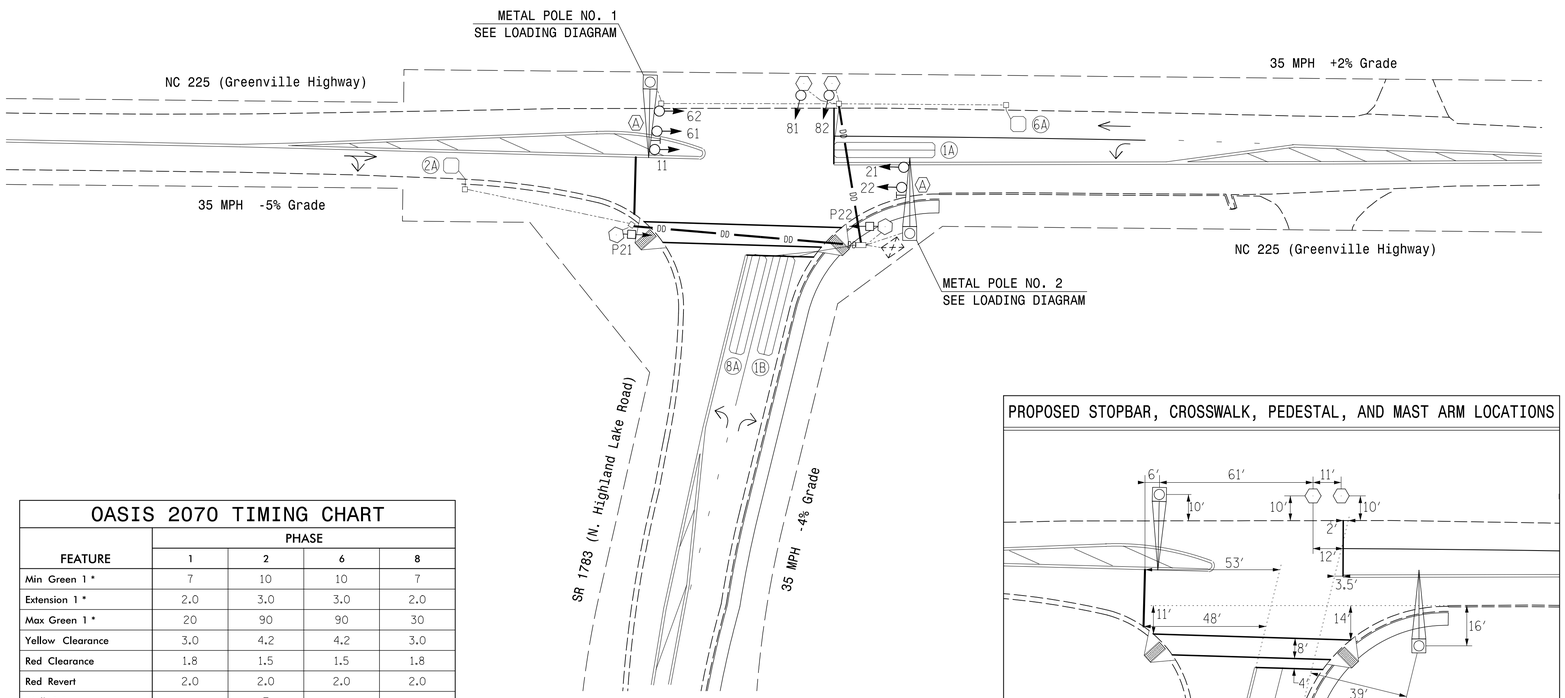


## PROPOSED STOPBAR, CROSSWALK, PEDESTAL, AND MAST ARM LOCATIONS

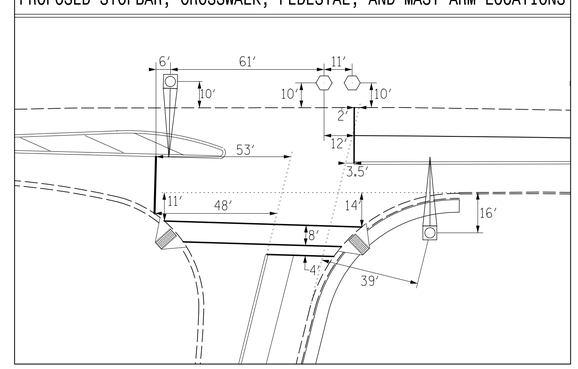


## LEGEND

| PROPOSED | | EXISTING |
|---|---|---|
| | Traffic Signal Head | |
| | Modified Signal Head | N/A |
| | Sign | |
| | Pedestrian Signal Head With Push Button & Sign | |
| | Inductive Loop Detector | |
| | Controller & Cabinet | |
| | Junction Box | |
| | Oversize Junction Box | |
| | 2-in Underground Conduit | |
| N/A | Right of Way | |
| | Directional Arrow | |
| DD | Directional Drill | N/A |
| | Metal Pole with Mastarm | |
| | Type II Signal Pedestal | |
| N/A | Wheelchair Ramp | |
| | "YIELD TO PEDESTRIAN" Sign (R10-15) | |

## OASIS 2070 TIMING CHART

| FEATURE | PHASE 1 | PHASE 2 | PHASE 6 | PHASE 8 |
|---|---|---|---|---|
| Min Green 1 * | 7 | 10 | 10 | 7 |
| Extension 1 * | 2.0 | 3.0 | 3.0 | 2.0 |
| Max Green 1 * | 20 | 90 | 90 | 30 |
| Yellow Clearance | 3.0 | 4.2 | 4.2 | 3.0 |
| Red Clearance | 1.8 | 1.5 | 1.5 | 1.8 |
| Red Revert | 2.0 | 2.0 | 2.0 | 2.0 |
| Walk 1 * | - | 7 | - | - |
| Don't Walk 1 | - | 16 | - | - |
| Seconds Per Actuation * | - | - | - | - |
| Max Variable Initial * | - | - | - | - |
| Time Before Reduction * | - | - | - | - |
| Time To Reduce * | - | - | - | - |
| Minimum Gap | - | - | - | - |
| Recall Mode | - | MIN RECALL | MIN RECALL | - |
| Vehicle Call Memory | - | YELLOW | YELLOW | - |
| Dual Entry | - | - | - | - |
| Simultaneous Gap | ON | ON | ON | ON |

* These values may be field adjusted. Do not adjust Min Green and Extension times for phases 2 and 6 lower than what is shown. Min Green for all other phases should not be lower than 4 seconds.

Signal Upgrade - Final Design

STV Engineers, Inc.
900 West Trade St., Suite 715
Charlotte, NC 28202
(704) 372-1885
NC License Number F-0991

Prepared for: Transportation Mobility and Safety Division, Signal Design Section, State of North Carolina Department of Transportation
750 N.Greenfield Pkwy,Garner,NC 27529

SCALE 0 30 1"=30'

# NC 225 (Greenville Highway) at SR 1783 (N. Highland Lake Road)

Division 14 Henderson County East Flat Rock

| | | | |
|---|---|---|---|
| PLAN DATE: | June 2019 | REVIEWED BY: | R. Dubnicka |
| PREPARED BY: | J. Trueblood | REVIEWED BY: | J. Carroll |

| REVISIONS | INIT. | DATE |
|---|---|---|
| | | |

DOCUMENT NOT CONSIDERED FINAL UNLESS ALL SIGNATURES COMPLETED

SEAL
NORTH CAROLINA PROFESSIONAL SEAL 030005 ENGINEER JUSTIN T. CARROLL

DocuSigned by: Justin T. Carroll 634DAC5D4E18486...
SIGNATURE 1/29/2020 DATE

SIG. INVENTORY NO. 14-1021

1/27/2020
MARCUS.CARROLL@stvinc.com
WIESMCAM
J:\Projects\4018442\4018442.000\460_Discipline Info\Traffic\Signal Design\41021-2019xxxxg.dgn