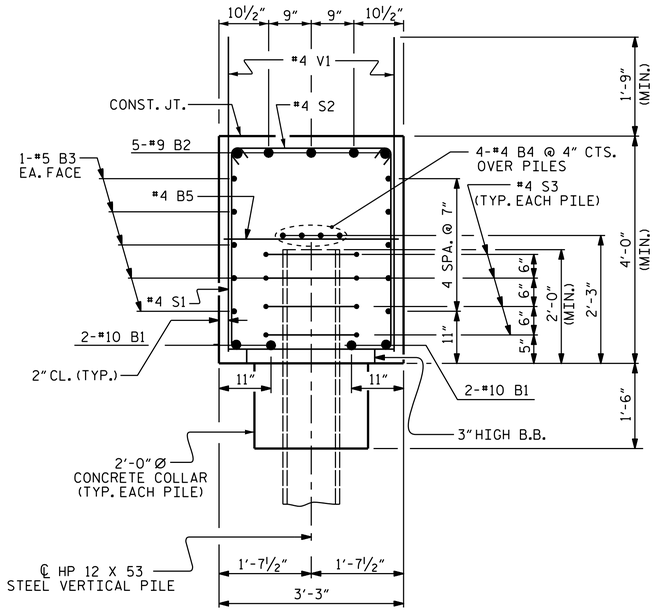

SECTION A-A

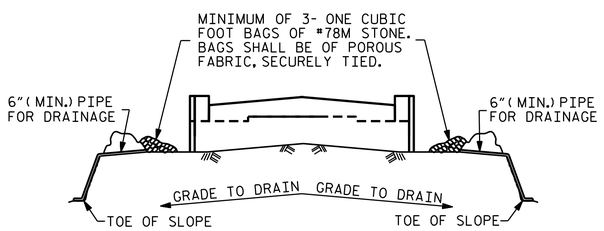

BAGGED STONE AND PIPE SHALL BE PLACED IMMEDIATELY AFTER COMPLETION OF END BENT EXCAVATION. PIPE MAY BE EITHER CONCRETE, CORRUGATED STEEL, CORRUGATED ALUMINUM ALLOY, OR CORRUGATED PLASTIC. PERFORATED PIPE WILL NOT BE ALLOWED.

BAGGED STONE SHALL REMAIN IN PLACE UNTIL THE ENGINEER DIRECTS THAT IT BE REMOVED. THE CONTRACTOR SHALL REMOVE AND DISPOSE OF SILT ACCUMULATIONS AT BAGGED STONE WHEN SO DIRECTED BY THE ENGINEER. BAGS SHALL BE REMOVED AND REPLACED WHENEVER THE ENGINEER DETERMINES THAT THEY HAVE DETERIORATED AND LOST THEIR EFFECTIVENESS.

NO SEPARATE PAYMENT WILL BE MADE FOR THIS WORK AND THE ENTIRE COST OF THIS WORK SHALL BE INCLUDED IN THE UNIT CONTRACT PRICE BID FOR THE SEVERAL PAY ITEMS.

TEMPORARY DRAINAGE AT END BENT

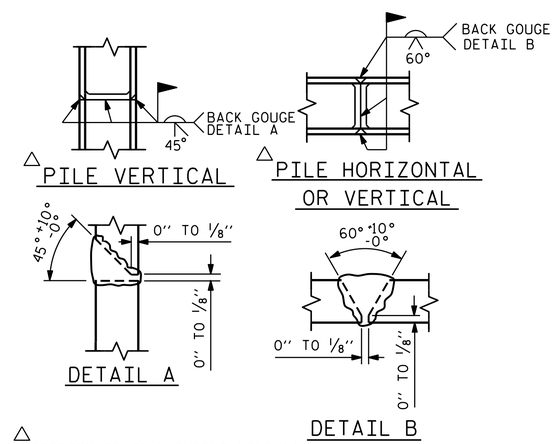

△ POSITION OF PILE DURING WELDING.

PILE SPLICE DETAILS

BAR TYPES

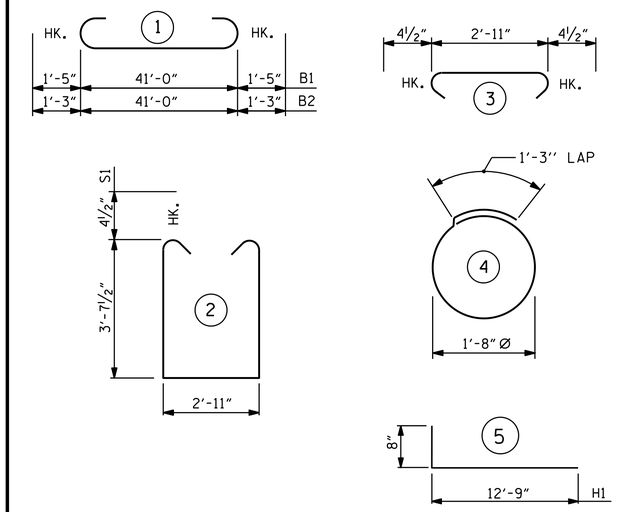

ALL BAR DIMENSIONS ARE OUT TO OUT.

BILL OF MATERIAL

INTEGRAL END BENT #2

BAR	NO.	SIZE	TYPE	LENGTH	WEIGHT
B1	4	#10	1	43'-10"	754
B2	5	#9	1	43'-6"	740
B3	10	#5	STR	41'-0"	428
B4	8	#4	STR	21'-10"	117
B5	11	#4	STR	2'-11"	21
H1	80	#5	5	13'-5"	1119
H2	48	#5	STR	3'-9"	188
S1	47	#4	2	10'-11"	343
S2	47	#4	3	3'-8"	115
S3	24	#4	4	6'-6"	104
V1	62	#4	STR	5'-7"	231
V2	68	#4	STR	9'-7"	435

REINFORCING STEEL = 4595 LBS

CLASS A CONCRETE

POUR #1 (CAP, CONCRETE COLLARS & LOWER PART OF WINGS) 25.3 C.Y.

POUR #2 (UPPER PART OF WINGS) 6.9 C.Y.

TOTAL 32.2 C.Y.

HP 12 x 53 STEEL PILES
No. 6 390 LIN FT.

PILE REDRIVES 3 EA.

PROJECT NO. B-4931
EDGECOMBE COUNTY
STATION: 16+99.00 -L-

SHEET 3 OF 3

STATE OF NORTH CAROLINA
DEPARTMENT OF TRANSPORTATION
RALEIGH

SUBSTRUCTURE
INTEGRAL
END BENT 2

NORTH CAROLINA PROFESSIONAL SEAL 030024 ENGINEER ASTER G. ABRAHA

DocuSigned by: Aster Abraha
DDA004AED5104FD...
5/22/2020

DOCUMENT NOT CONSIDERED FINAL UNLESS ALL SIGNATURES COMPLETED

REVISIONS							SHEET NO.
NO.	BY:	DATE:	NO.	BY:	DATE:		S-27
1			3				TOTAL SHEETS
2			4				30

DRAWN BY : M.M. AHMED DATE : 12/20/19
CHECKED BY : S. WANCE DATE : 01/20
DESIGN ENGINEER OF RECORD: M.M. AHMED DATE : 09/19

22-MAY-2020 10:07
R:\Structures\Plans\B4931_SMU_Ebs*_320022.dgn
aabraha