PROJECT REFERENCE NO.	SHEET NO.
B-4931	UC-3A
DESIGNED BY: DK	
DRAWN BY: CS	
CHECKED BY: MM	
APPROVED BY:	
REVISED:	
NORTH CAROLINA DEPARTMENT OF TRANSPORTATION	
UTILITIES ENGINEERING SEC. PHONE:(919)707-6690 FAX:(919)250-4151	UTILITY CONSTRUCTION PLANS ONLY

NORTH CAROLINA PROFESSIONAL SEAL 032322 ENGINEER MARCO R. MENEGHINI
DocuSigned by: Marco Meneghini 2D1015F8B58A480...
3/6/2020

KCI http://www.kci.com
Engineers • Planners • Scientists • Construction Managers
4505 Falls of Neuse Road, Suite 400
Raleigh, NC 27609
Phone (919) 783-9214 • Fax (919) 783-9266
License No. C-764

UTILITY CONSTRUCTION

DOCUMENT NOT CONSIDERED FINAL UNLESS ALL SIGNATURES COMPLETED

PROJECT TYPICAL DETAILS

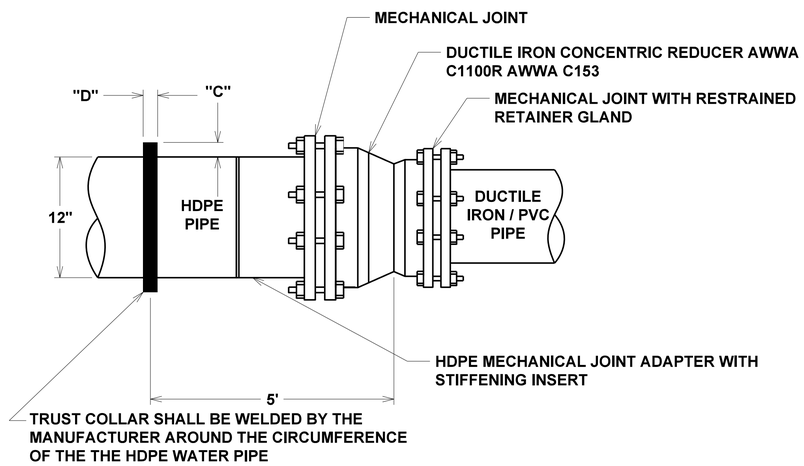

NOTE: SEE SEPARATE DETAIL FOR CONCRETE THRUST COLLAR

TRANSITION DETAIL FROM HDPE TO DI / PVC WATER PIPE

NOTE:
CONTRACTOR TO PROVIDE P. E. SEALED DESIGNED SHOP DRAWINGS FOR THRUST COLLARS BASED UPON THE ACTUAL ON-SITE EXISTING SOILS IN ACCORDANCE WITH THE LATEST NCDOT STANDARDS AND SPECIFICATIONS.

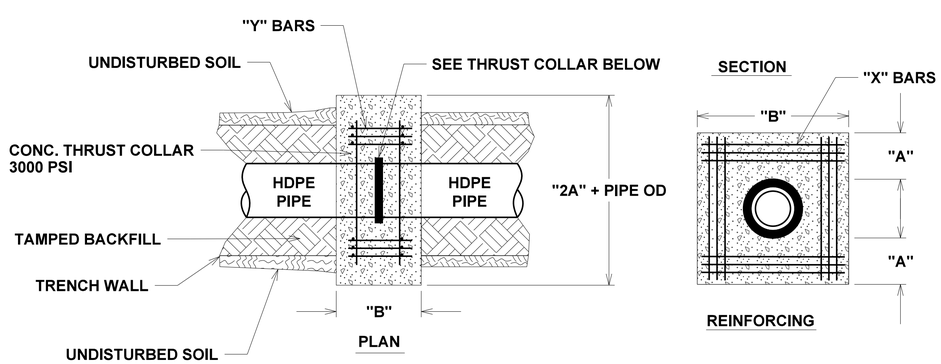

POSSIBLE STEEL REINFORCEMENT TO BE VERIFIED BY CONTRACTOR'S ENGINEER

12" WATER MAIN = 12 NO. 5 BARS PLACED AS SHOWN IN EACH FACE (X BARS) + 6 - NO. 5 BARS IN EACH FACE (Y BARS) TOTAL 24 "X" BARS & 12 "Y" BARS PER THRUST COLLAR.

DIMENSIONS " A, B, C, D, & X/Y" SHALL BE DETERMINED BY CONTRACTOR'S DESIGN ENGINEER.

CONCRETE THRUST COLLAR DETAIL - 12" WATER LINE

TRENCH DETAIL

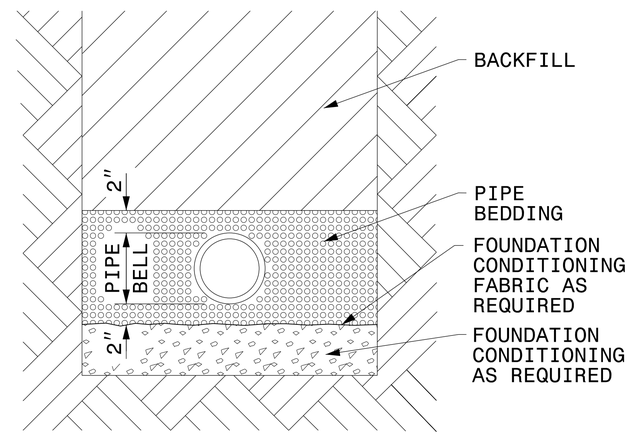

PLACE FOUNDATION CONDITIONING MATERIAL BELOW BEDDING IF REQUIRED, AS DIRECTED BY ENGINEER. PIPE BEDDED IN SELECT MATERIAL, CLASS II (TYPE 1) OR CLASS III. TRENCH BACKFILLED IN LOOSE 6" LAYERS COMPACTED TO TOP OF TRENCH USING LOCAL EXCAVATED MATERIAL IF APPROVED BY THE ENGINEER, OR SELECT MATERIAL. ALL MATERIAL SHALL BE FREE OF ROCKS, FOREIGN MATERIAL, AND FROZEN EARTH. COMPACTION SHALL BE TO APPROXIMATELY 95% DENSITY IN ACCORDANCE WITH AASHTO T-99 AS MODIFIED BY THE DEPARTMENT OF TRANSPORTATION.

5/14/99
06-MAR-2020 09:16
$$$$USERNAME$$$$
$$$$DATE$$$$
$$$$TIME$$$$
Wastewater\B-4931_ut_sew_rdy_UC03A.dgn
945.19