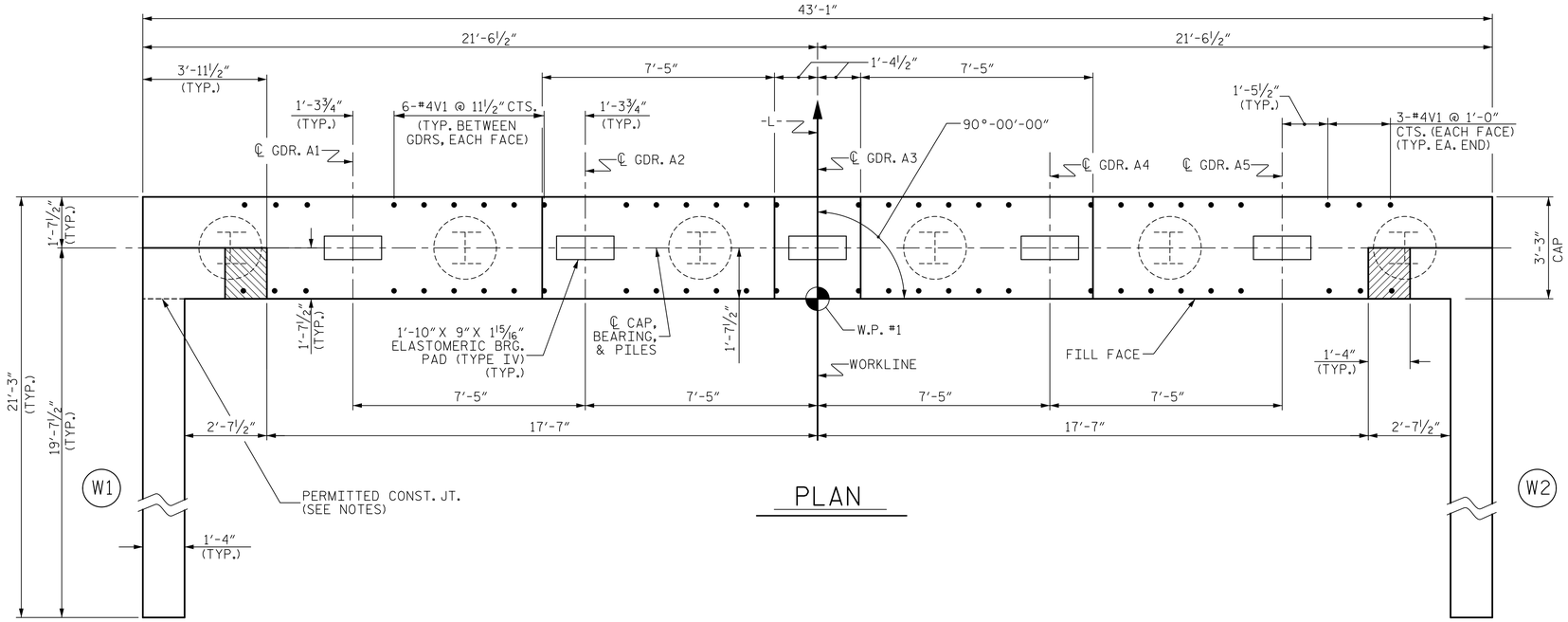

PLAN

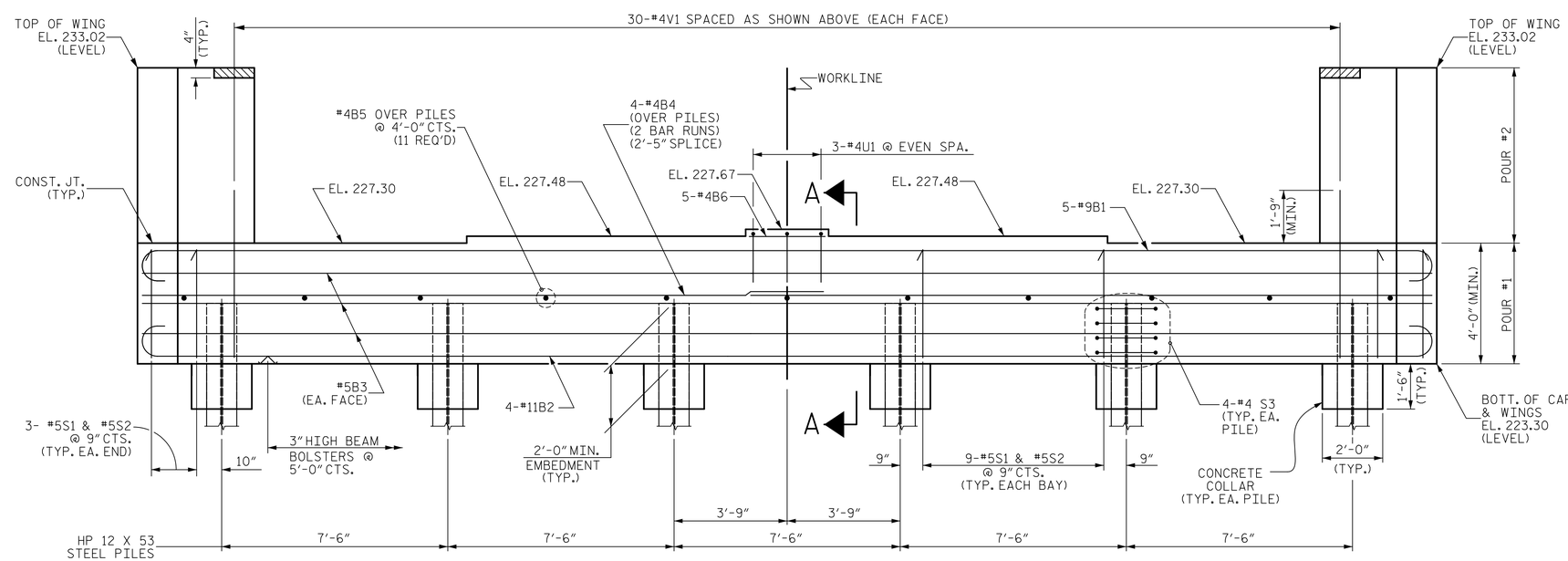

ELEVATION

NOTES

THE TOP SURFACE OF THE END BENT CAP, EXCEPT THE BEARING AREA, SHALL BE RAKED TO A DEPTH OF ¼".

THE CONCRETE IN THE SHADED AREA OF THE WING SHALL BE POURED AFTER THE BARRIER RAIL IS CAST IF SLIP FORMING IS USED.

FOR SECTION A-A, SEE SHEET 5 OF 6.

AT THE CONTRACTOR'S OPTION, THE WINGWALL MAY BE BUILT USING STAGED CONSTRUCTION WITH MECHANICAL COUPLERS. NO ADDITIONAL COMPENSATION WILL BE MADE FOR THE PERMITTED CONSTRUCTION JOINT INCLUDING ADDITIONAL WORK FOR THE REINFORCED FILL.

IF STAGED CONSTRUCTION OF THE WINGWALL IS USED, PORTABLE CONCRETE BARRIER MAY BE REQUIRED IF ROOM DOES NOT ALLOW FOR DRIVING OF THE GUARDRAIL POSTS. FOR PORTABLE CONCRETE BARRIER PAY ITEM, SEE ROADWAY PLANS.

NORTH CAROLINA PROFESSIONAL SEAL ENGINEER PATRICK R. GALLAGHER 042890 SIGNATURE AUTHORIZED PER NCGS 143-215.69(b) Patrick R. Gallagher 3/18/2021

DOCUMENT NOT CONSIDERED FINAL UNLESS ALL SIGNATURES COMPLETED

V&M Vaughn & Melton Consulting Engineers
Asheville, North Carolina 828-253-2796
Boone, NC 828-355-9933
Tri-Cities, TN 423-467-8401
Knoxville, TN 865-546-5800
Spartanburg, SC 864-574-4775
Charleston, SC 843-974-5650
Middesboro, KY 606-248-6600
Atlanta, GA 770-627-3590
Raleigh, NC 919-977-9455
Charlotte, NC 704-357-0488

Copyright © 2006 Vaughn & Melton, Inc. All Rights Reserved

PROJECT NO. B-4407

ANSON/STANLY COUNTY

STATION: 32+31.61 -L-

SHEET 1 OF 6

STATE OF NORTH CAROLINA
DEPARTMENT OF TRANSPORTATION
RALEIGH

SUBSTRUCTURE
END BENT NO. 1

DWN. BY: AW	DATE: 10/2020	REVISIONS					SHEET NO.
CHKD. BY: RTS	DATE: 10/2020	NO.	BY:	DATE:	NO.	BY:	DATE:	S-29
DES. EGR. OF RECORD: PRG	DATE: 10/2020	1			3			TOTAL SHEETS
		2			4			45

wdcruder
DGN: VMC:Transportation\3130-09_B4407\Structures\Final Plans\40_057_B-4407_SMU_EB01_S29.dgn
TIME: 11:30 AM on Monday, February 22, 2021