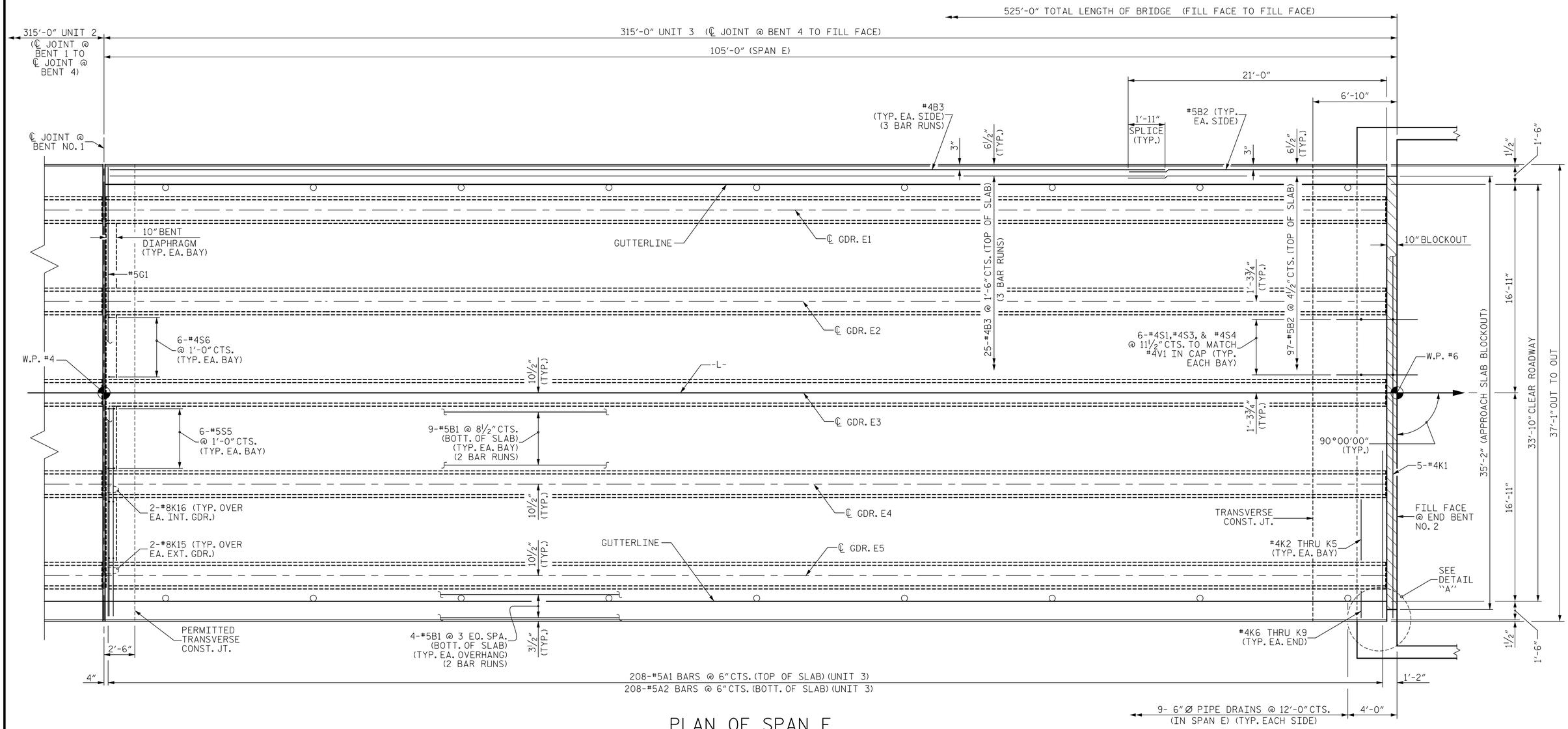

PLAN OF SPAN E

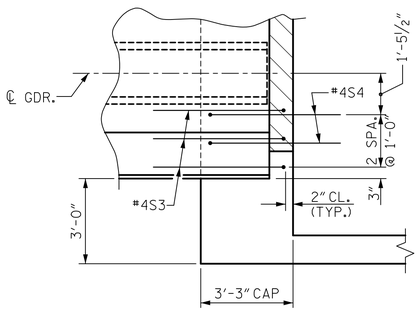

DETAIL "A"

(TYPICAL FOR EACH DECK CORNER)
(S1 BARS NOT SHOWN FOR CLARITY)

PROJECT NO. B-4407

ANSON/STANLY COUNTY

STATION: 32+31.61 -L-

SHEET 5 OF 5

STATE OF NORTH CAROLINA
DEPARTMENT OF TRANSPORTATION
RALEIGH

SUPERSTRUCTURE
PLAN OF SPAN E

NORTH CAROLINA PROFESSIONAL SEAL 042890 ENGINEER PATRICK R. GALLAGHER
3/18/2021

V&M Vaughn & Melton Consulting Engineers
Asheville, North Carolina 828-253-2796
Boone, NC 828-355-9933
Tri-Cities, TN 423-467-8401
Knoxville, TN 865-546-5800
Spartanburg, SC 864-574-4775
Charleston, SC 843-974-5650
Middlesboro, KY 606-248-6600
Atlanta, GA 770-627-3590
Raleigh, NC 919-977-9455
Charlotte, NC 704-357-0488
Copyright © 2006 Vaughn & Melton, Inc. All Rights Reserved

DOCUMENT NOT CONSIDERED FINAL UNLESS ALL SIGNATURES COMPLETED

DWN. BY: WDC	DATE: 10/2020
CHKD. BY: PRG	DATE: 10/2020
DES. EGR. OF RECORD: PRG	DATE: 10/2020

REVISIONS						SHEET NO.
NO.	BY:	DATE:	NO.	BY:	DATE:	S-13
1			3			TOTAL SHEETS
2			4			45

wdcruticher
DGN: V:\MC\Transportation\03\730-09 B4407\Structures\Final Plans\401_025_B-4407_SMU_PS05_S13.dgn
TIME: 0359 PM on Wednesday, February 03, 2021