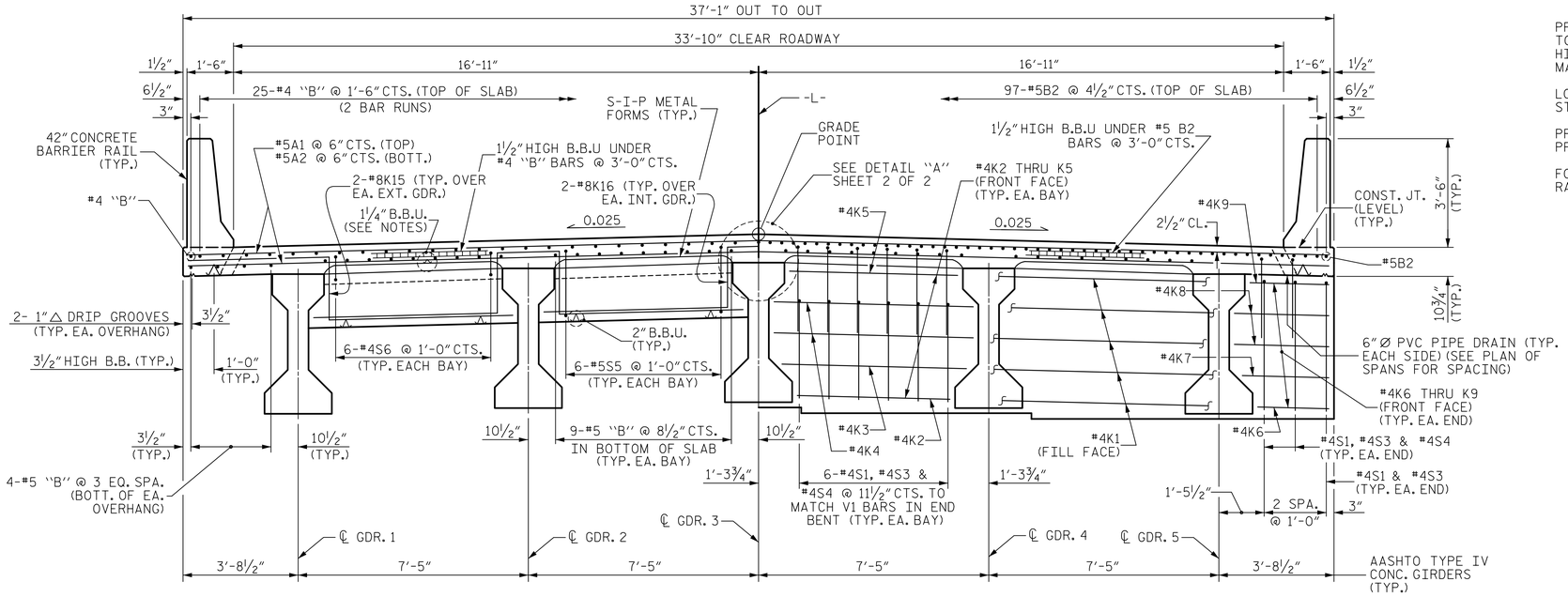

TYPICAL HALF-SECTION AT BENT DIAPHRAGM

(BENTS 1 & 4)

TYPICAL HALF-SECTION AT END BENT DIAPHRAGM

TYPICAL SECTION

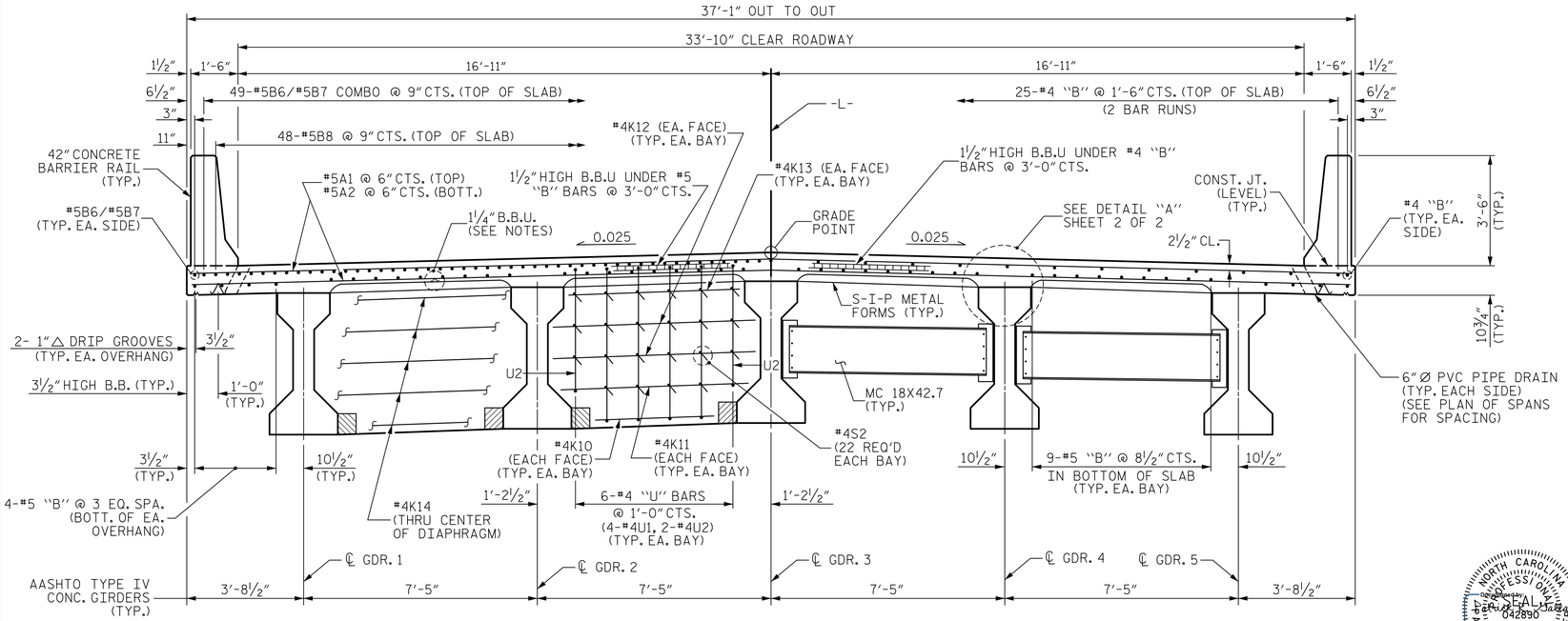

TYPICAL HALF-SECTION AT BENT DIAPHRAGM

(BENTS 2 & 3)

TYPICAL HALF-SECTION AT INTERMEDIATE DIAPHRAGM

TYPICAL SECTION

NOTES

PROVIDE 1¼" HIGH BEAM BOLSTERS UPPER AT 4'-0" CTS. ATOP THE METAL STAY-IN-PLACE FORMS TO SUPPORT THE BOTTOM MAT OF 'A' BARS. WHEN USING REMOVABLE FORMS, PROVIDE CONTINUOUS HIGH CHAIRS FOR METAL DECK (C.H.C.M.) @ 4'-0" CTS. WITH A HEIGHT TO SUPPORT THE BOTTOM MAT OF 'A' BARS A CLEAR DISTANCE OF 2½" ABOVE THE TOP OF THE REMOVABLE FORM.

LONGITUDINAL STEEL MAY BE SHIFTED SLIGHTLY, AS NECESSARY, TO AVOID INTERFERENCE WITH STIRRUPS IN PRESTRESSED CONCRETE GIRDERS.

PREVIOUSLY CAST CONCRETE IN A CONTINUOUS UNIT SHALL HAVE ATTAINED A MINIMUM COMPRESSIVE STRENGTH OF 3,000 PSI BEFORE ADDITIONAL CONCRETE IS CAST IN THE UNIT.

FOR 42" CONCRETE BARRIER RAIL REINFORCING STEEL AND DETAILS, SEE "CONCRETE BARRIER RAIL" SHEET.

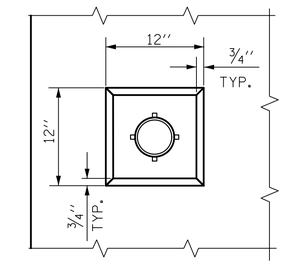

PLAN OF RECESS

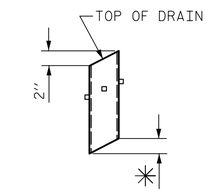

✳ TO BE SET TO MATCH SLOPE OF BOTTOM OF OVERHANG (48 DRAINS REQUIRED)

PIPE DETAIL

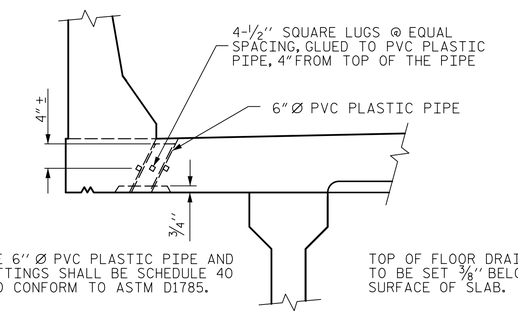

ELEVATION

DRAIN DETAILS

NOTE: ALL DRAIN FEATURES SHOWN HERE SHALL BE INCIDENTAL TO THE PRICE BID FOR "REINFORCED CONCRETE DECK SLAB".

PROJECT NO. B-4407

ANSON/STANLY COUNTY

STATION: 32+31.61 -L-

SHEET 1 OF 2

STATE OF NORTH CAROLINA
DEPARTMENT OF TRANSPORTATION
RALEIGH

SUPERSTRUCTURE
TYPICAL SECTION

NORTH CAROLINA PROFESSIONAL SEAL ENGINEER PATRICK R. GALLAGHER 042890 SEAL 042890 3/18/2021

Vaughn & Melton
Consulting Engineers
Asheville, North Carolina
828-253-2796
Boone, NC 828-355-9933
Tri-Cities, TN 423-467-8401
Knoxville, TN 865-546-5800
Spartanburg, SC 864-574-4775
Charleston, SC 843-974-5650
Middlesboro, KY 606-248-6600
Atlanta, GA 770-627-3590
Raleigh, NC 919-977-9455
Charlotte, NC 704-357-0488

Copyright © 2006 Vaughn & Melton, Inc. All Rights Reserved

DOCUMENT NOT CONSIDERED FINAL UNLESS ALL SIGNATURES COMPLETED

DWN. BY: WDC DATE: 10/2020
CHKD. BY: PRG DATE: 10/2020
DES. EGR. OF RECORD: PRG DATE: 10/2020

REVISIONS							SHEET NO.
NO.	BY:	DATE:	NO.	BY:	DATE:		S-7
1			3				TOTAL SHEETS
2			4				45

w0crutcher
DGN: V:\MCT\transportation\2317.30-09 B4407\Structures\Final Plans\40_D13_B-4407_SM0_TS01_S07.dgn
TIME: 05:21 PM on Friday, February 05, 2021